E-11310-C18B

Vintage Series

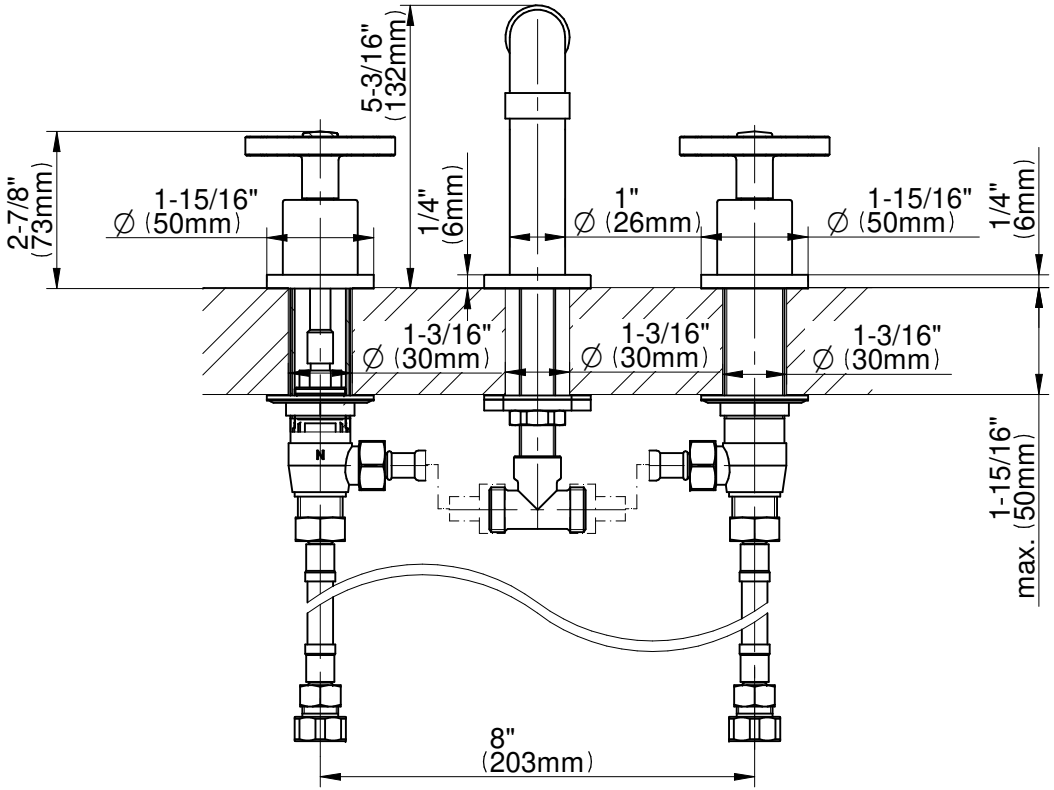

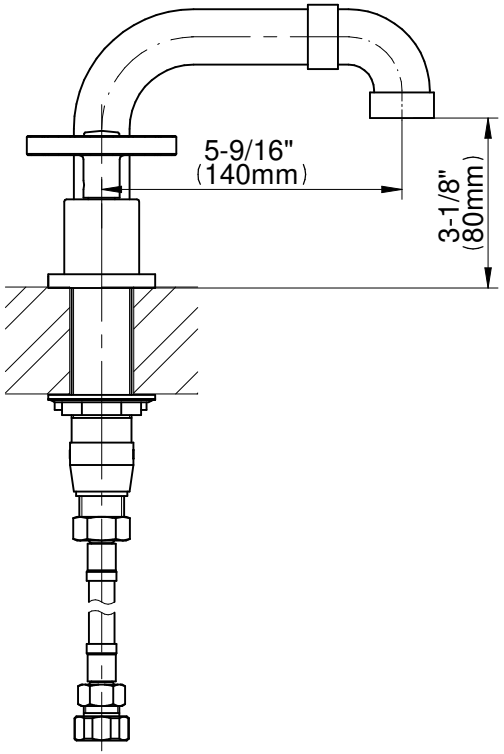

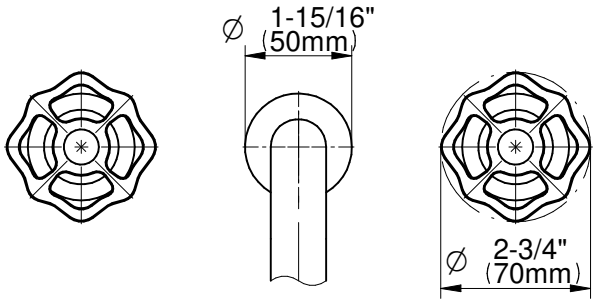

GRAFF®
CUTTING EDGE DESIGN