G-8179-C20E-T

VIGNOLA Series

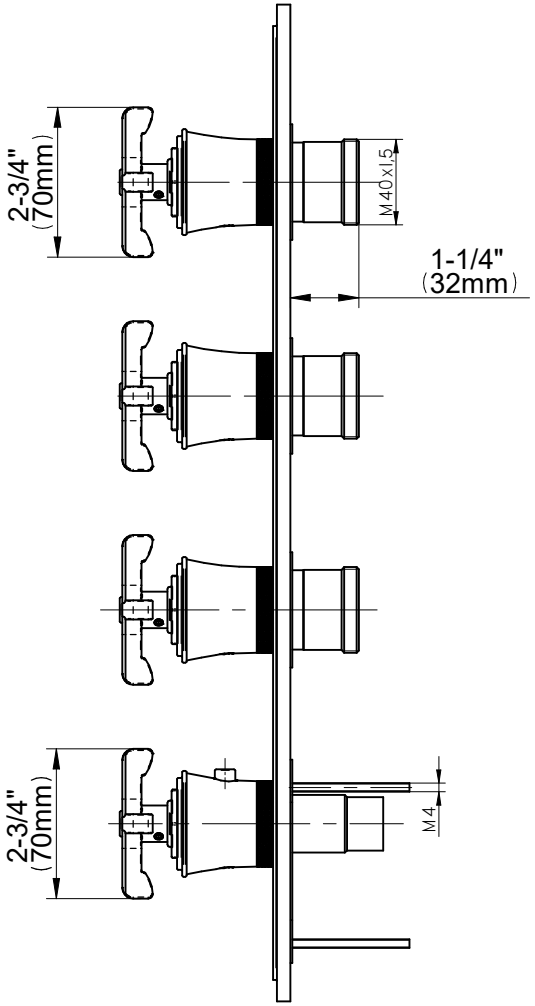

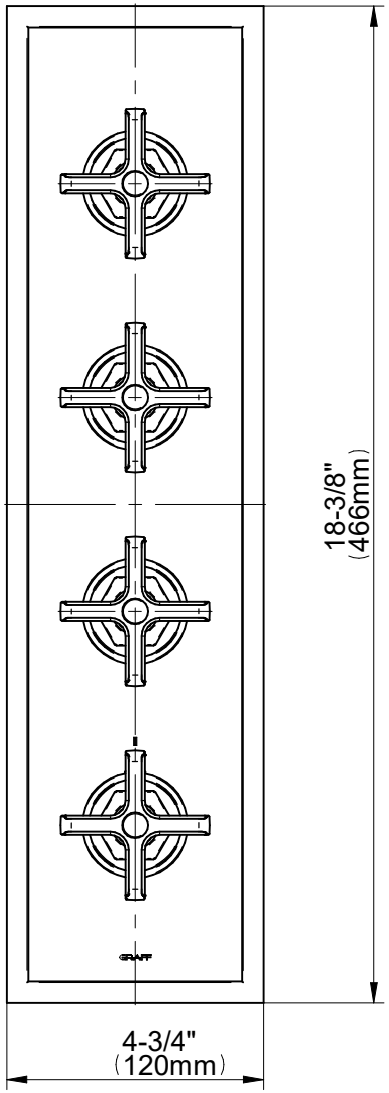

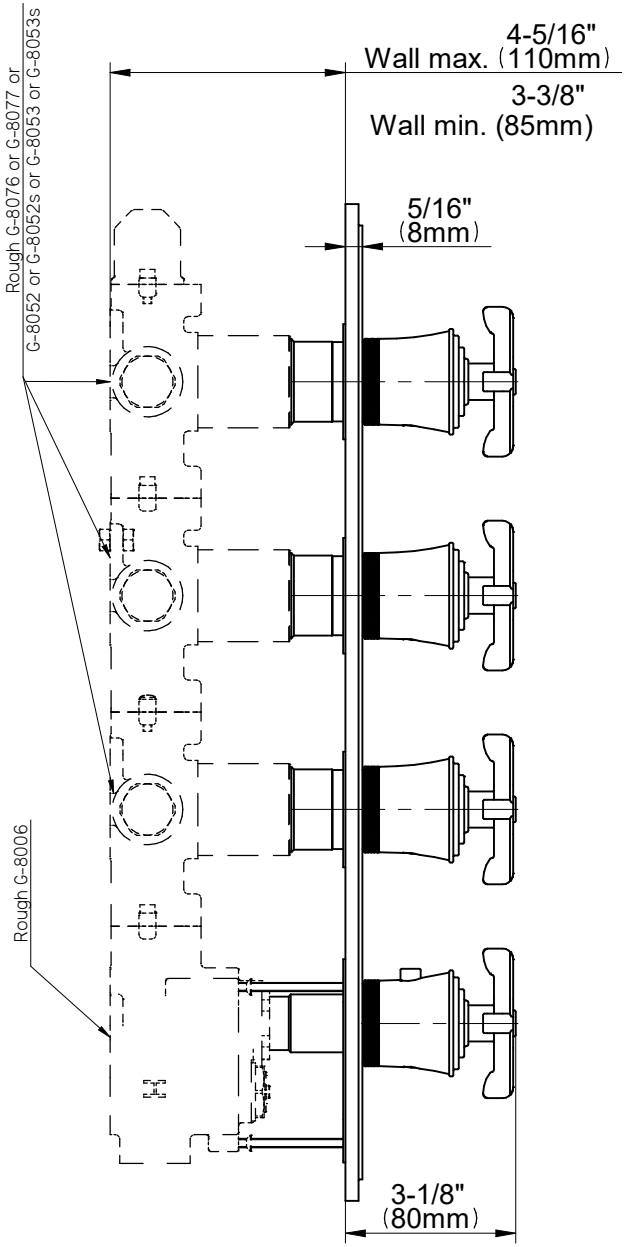

GRAFF®
Art of Bath