G-8144-LM47E1-T

Finezza Due Series

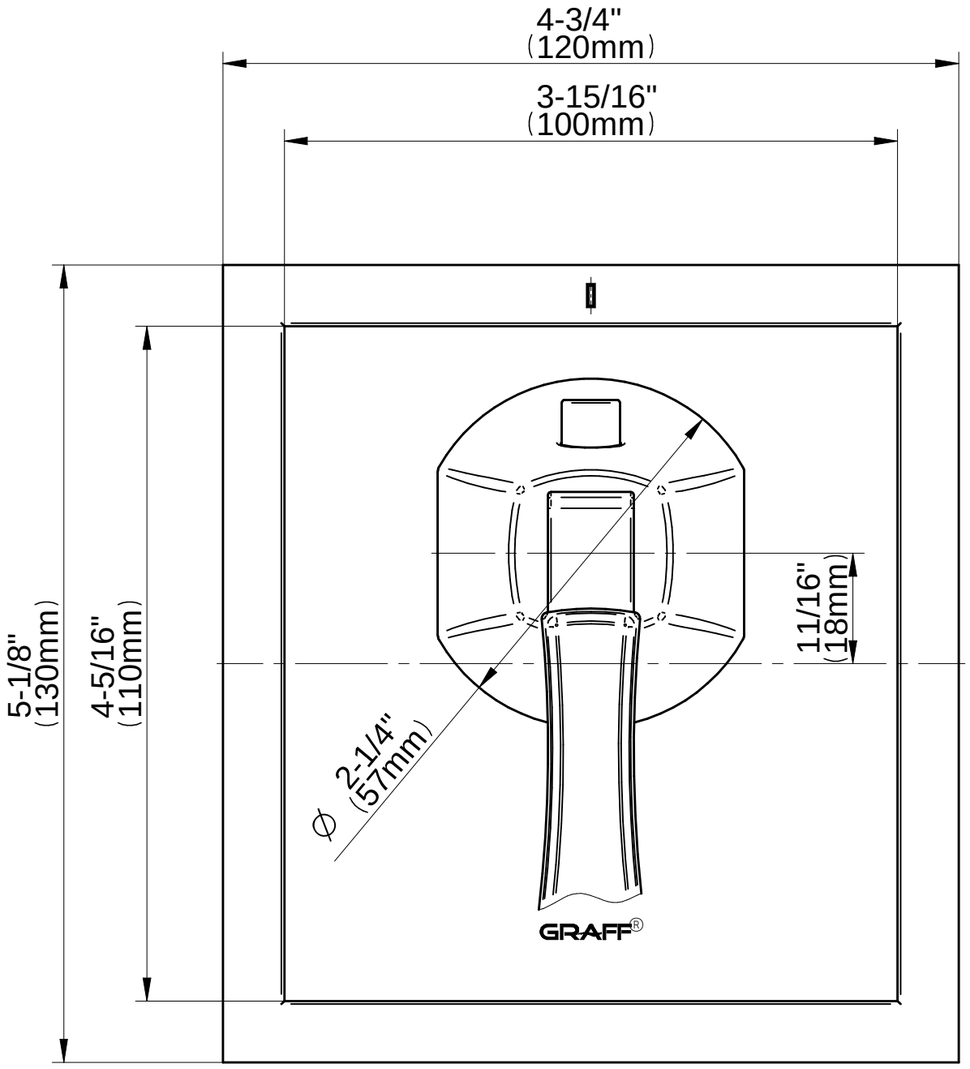

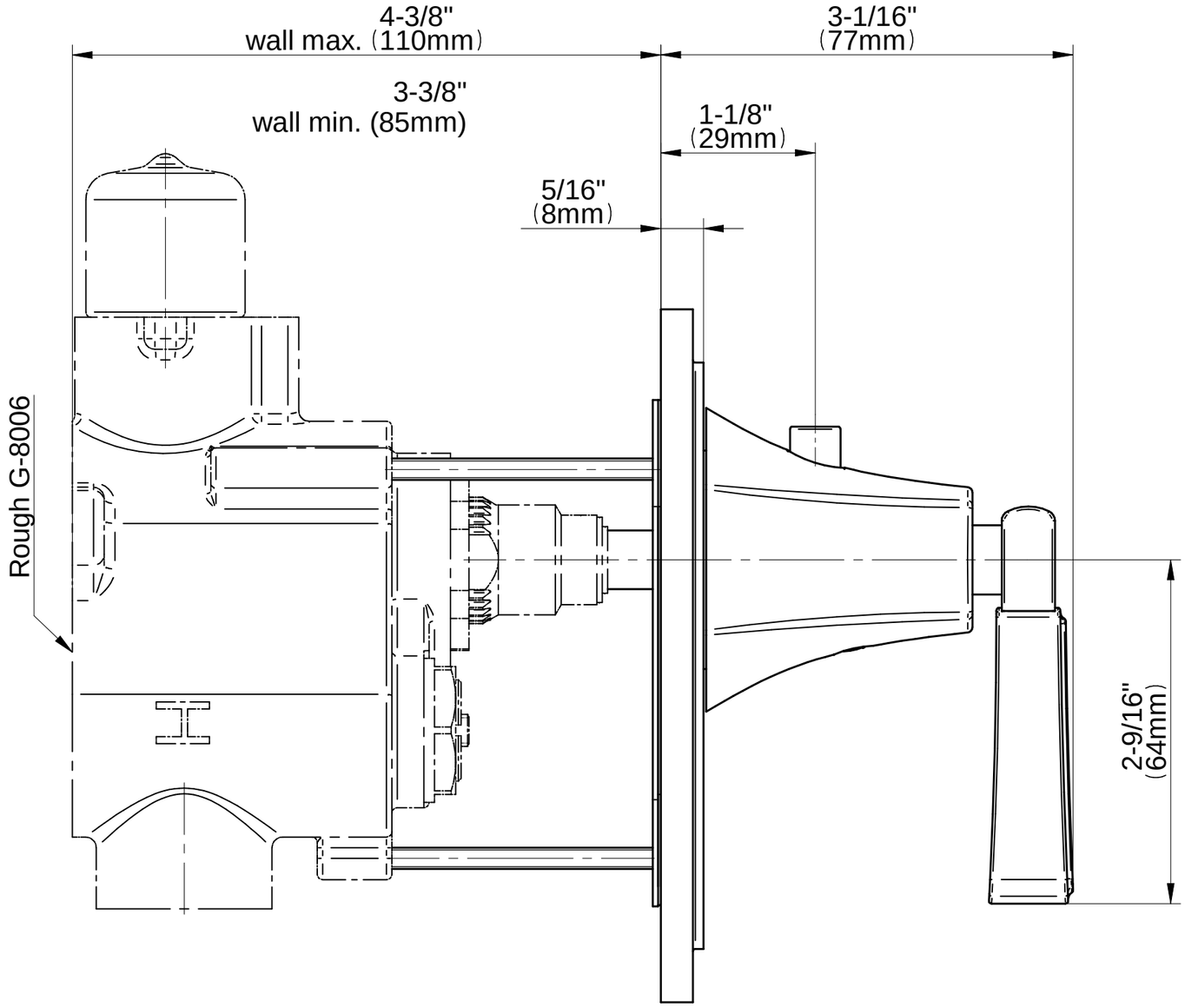

GRAFF®

CUTTING EDGE DESIGN