G-8043-LM40E-T

IMMERSION Series

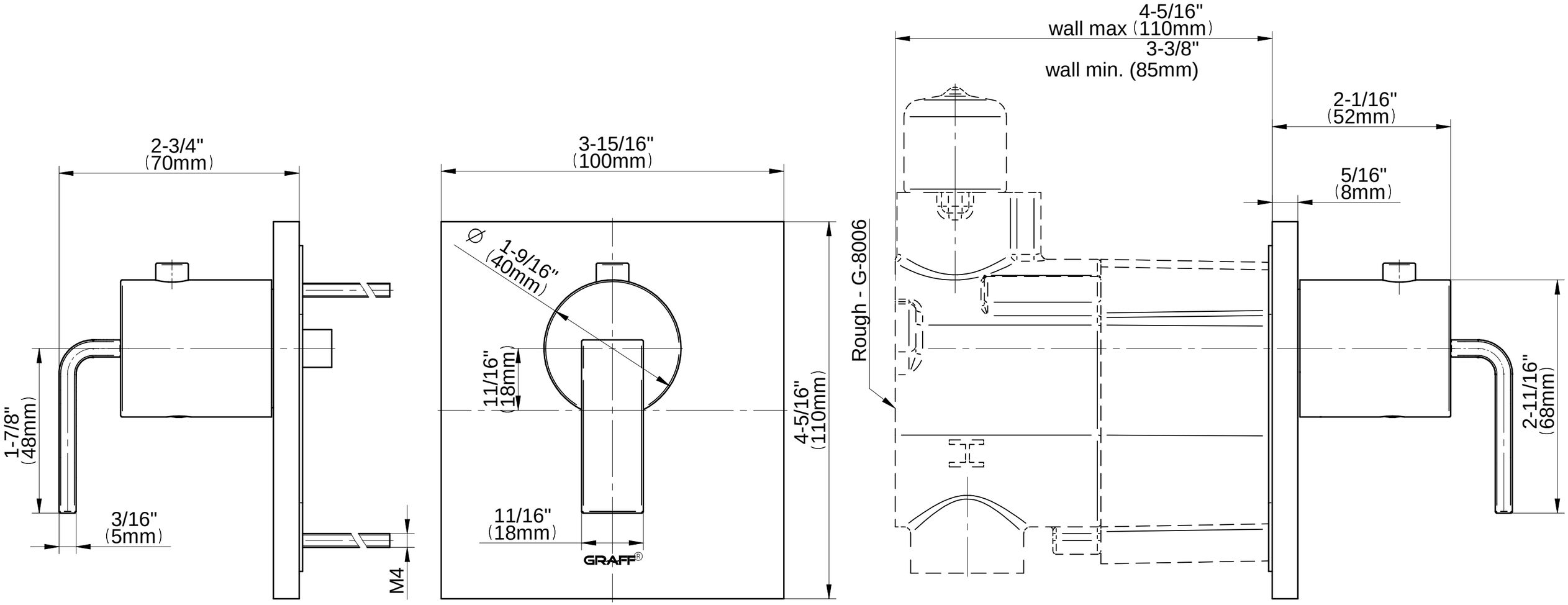

GRAFF®

CUTTING EDGE DESIGN