E-18042-LM36E-**-T

Uni-Box Series

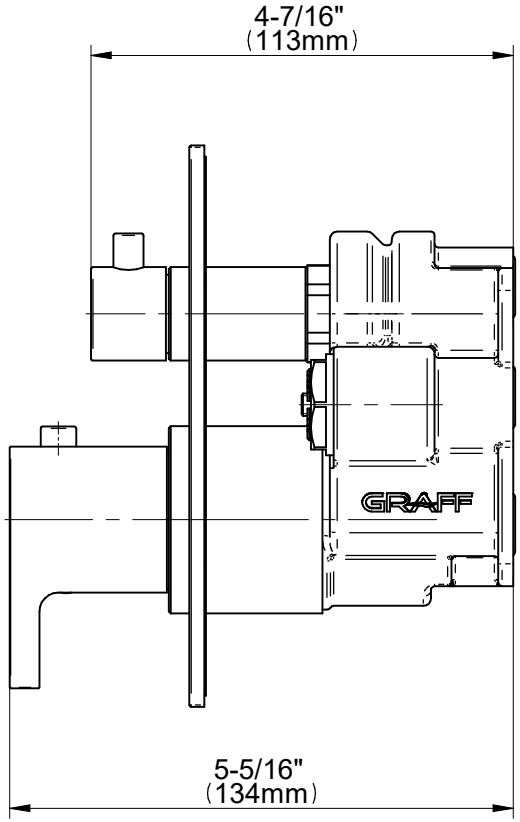

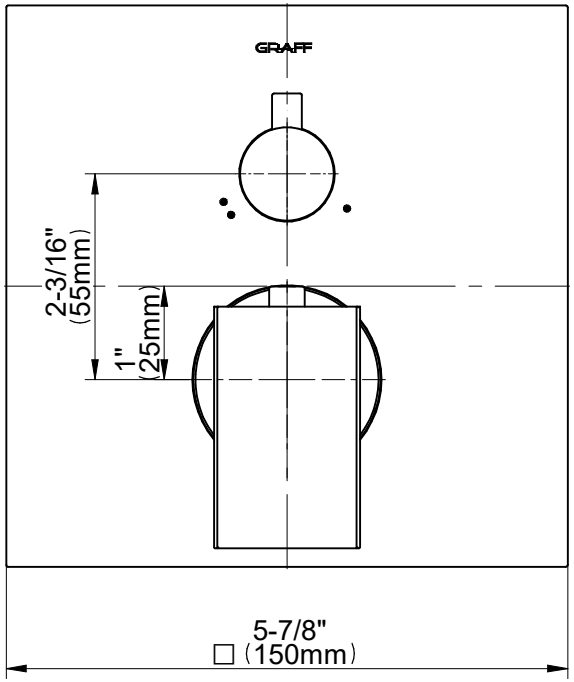

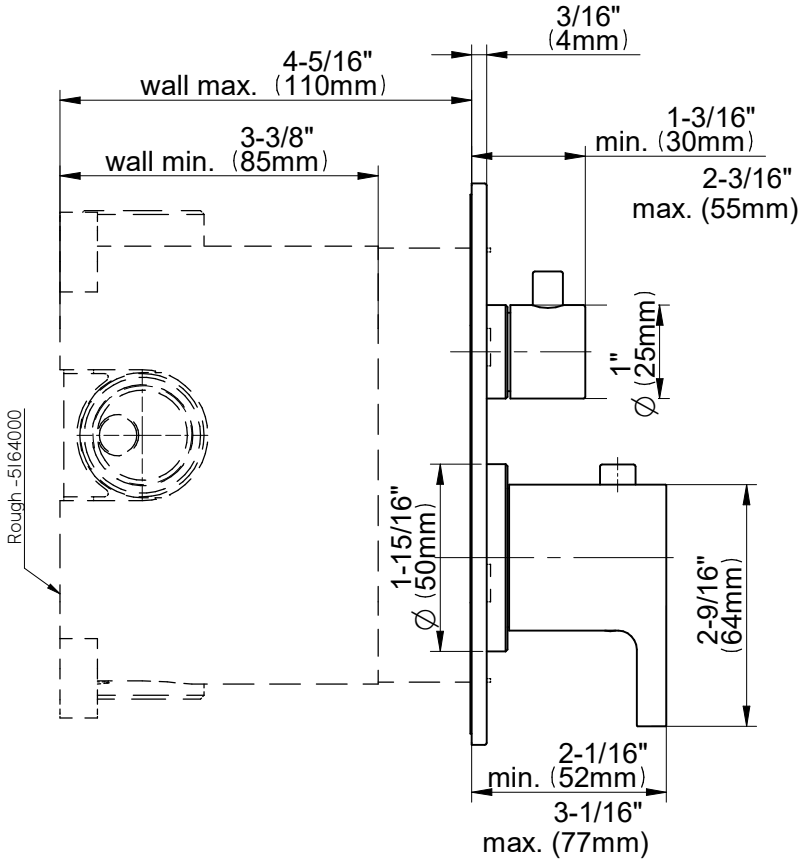

GRAFF®
Art of Bath