GT7.090H-C18E0-T

Vintage Series

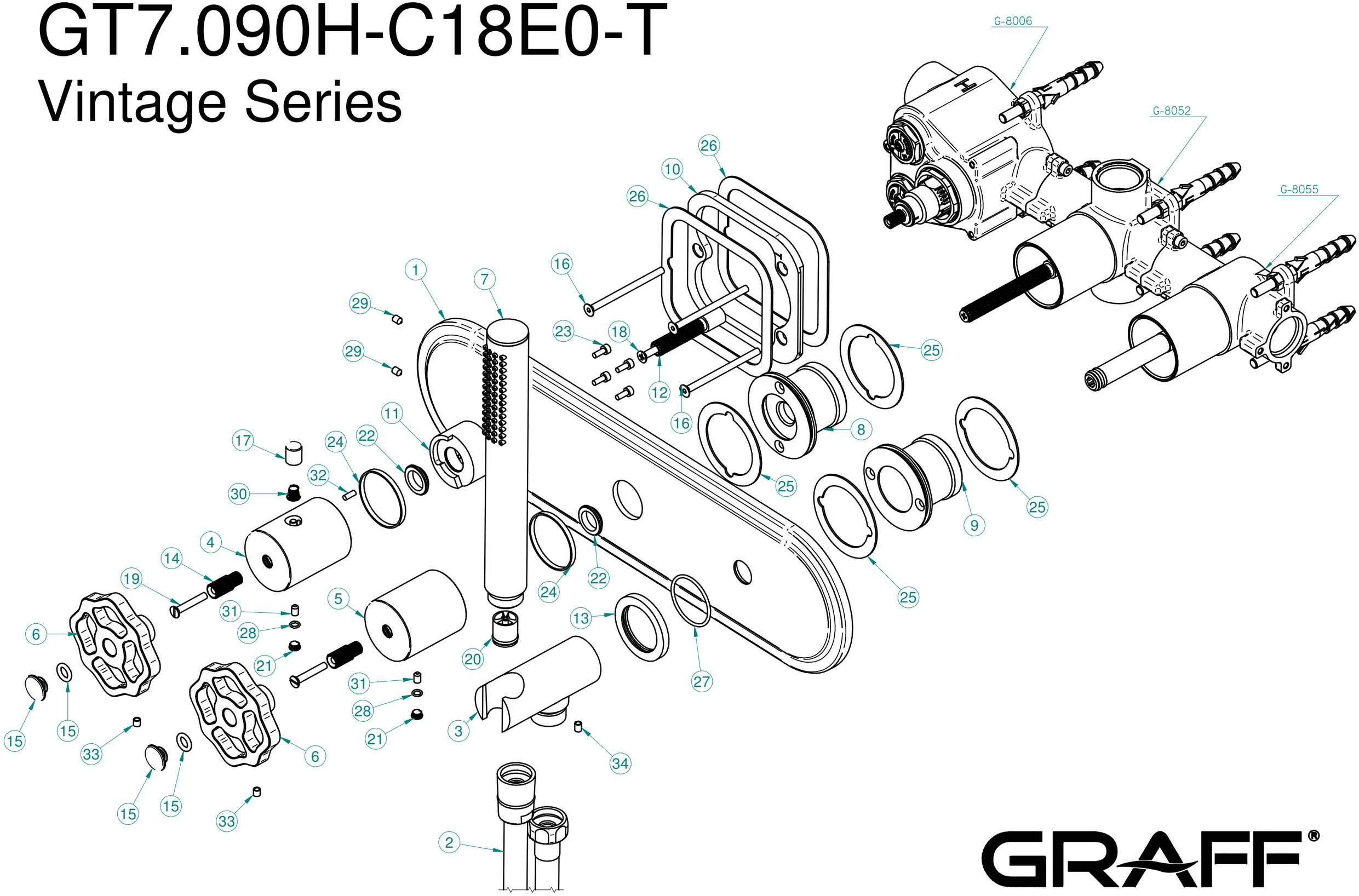

GRAFF®

Art of Bath