G-8086H-LM63E0-T

Topaz Series

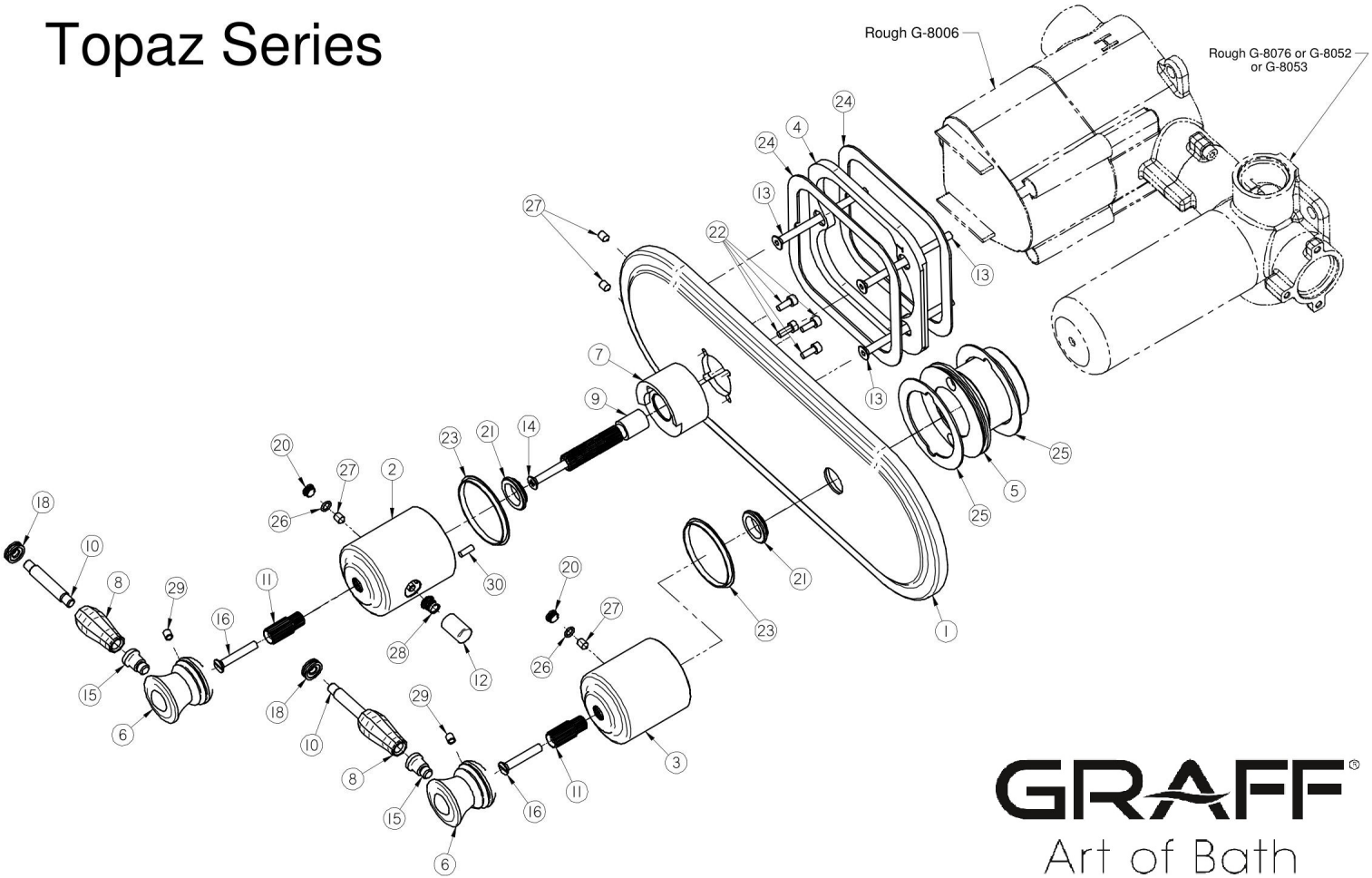

GRAFF®
Art of Bath