G-11422TF

SENSOR MIXERS Series

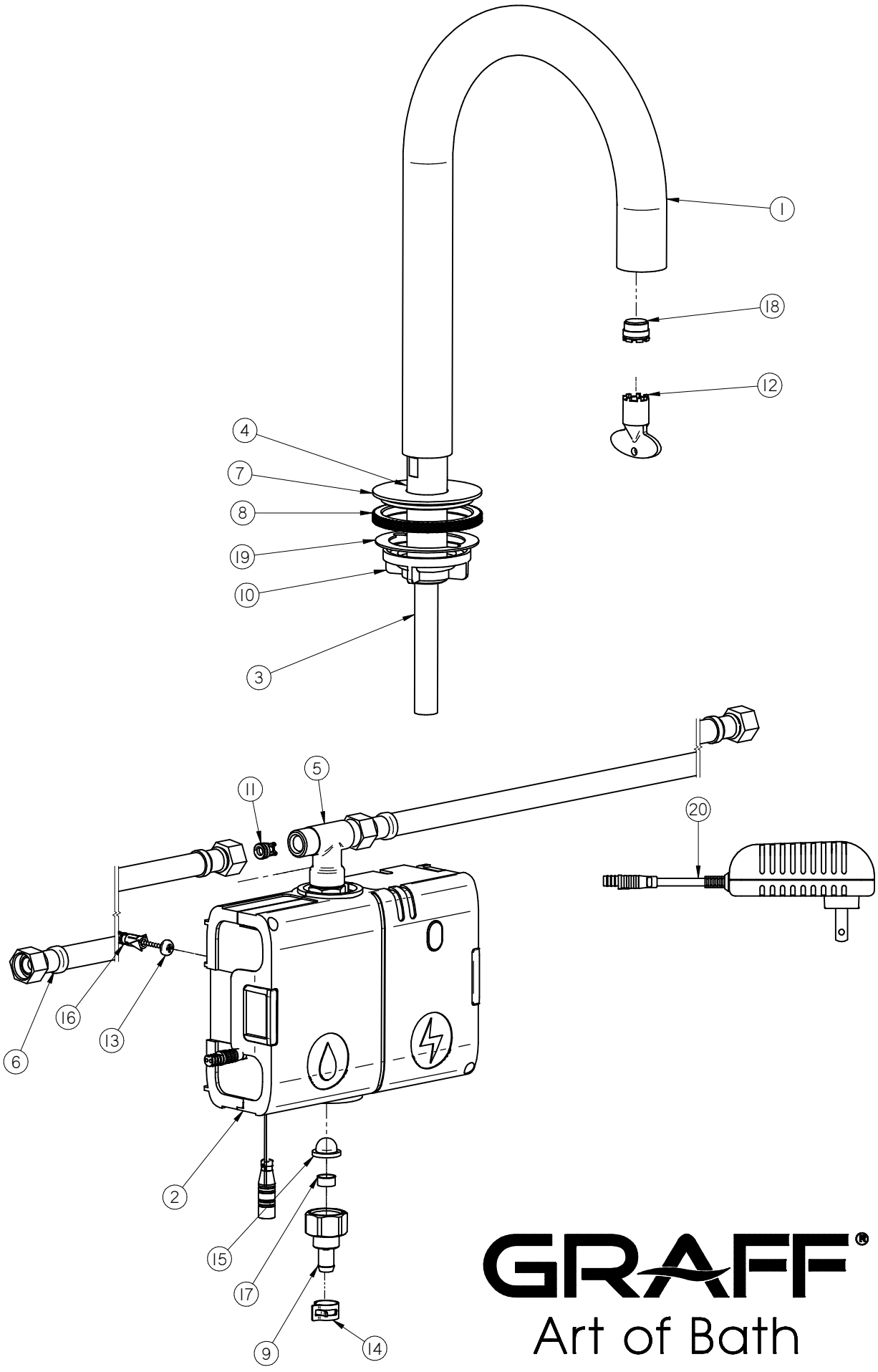

GRAFF®
Art of Bath