E-6759-LM46W
TERRA Series

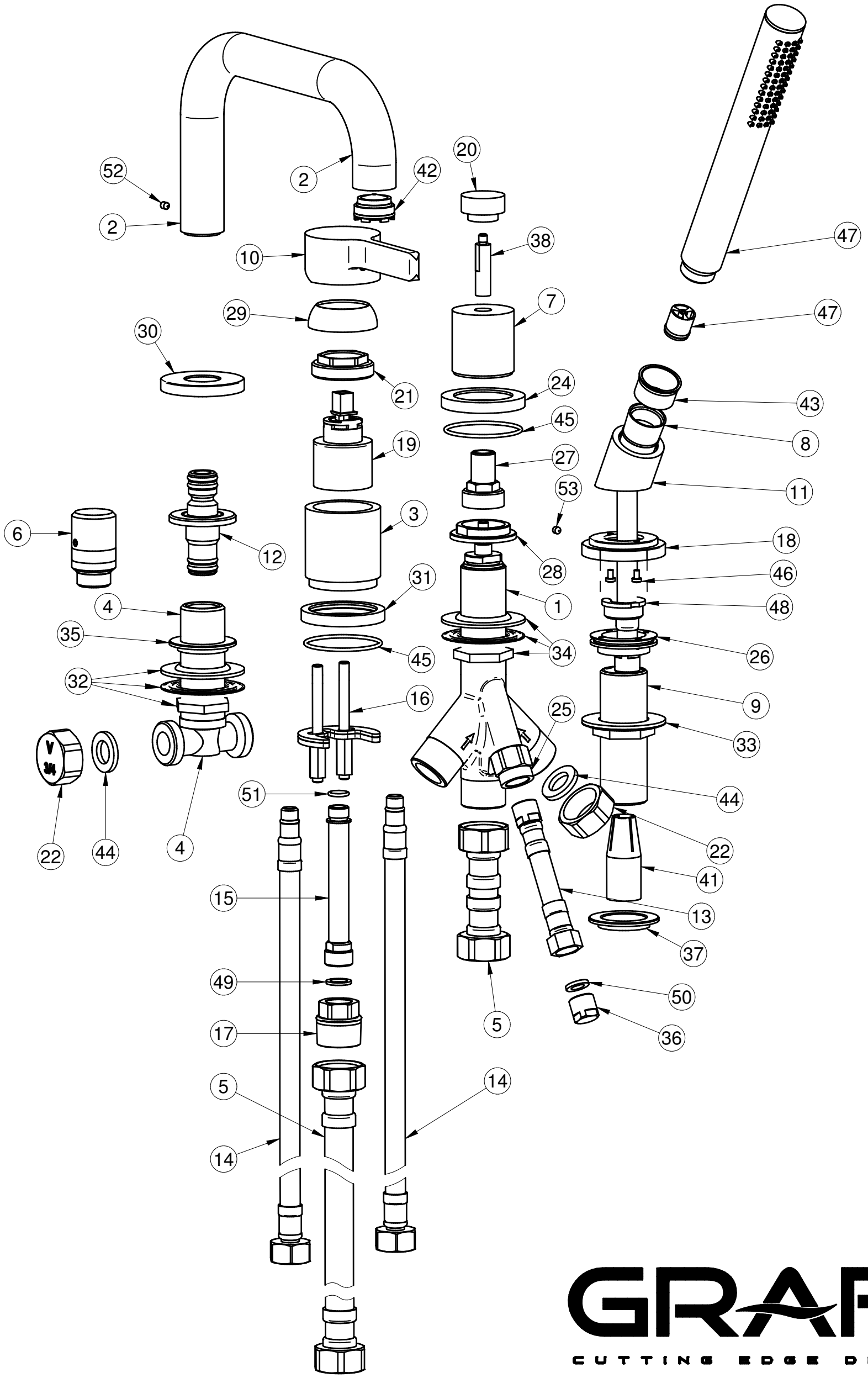

GRAFF®
CUTTING EDGE DESIGN