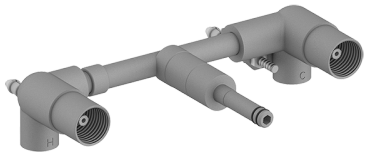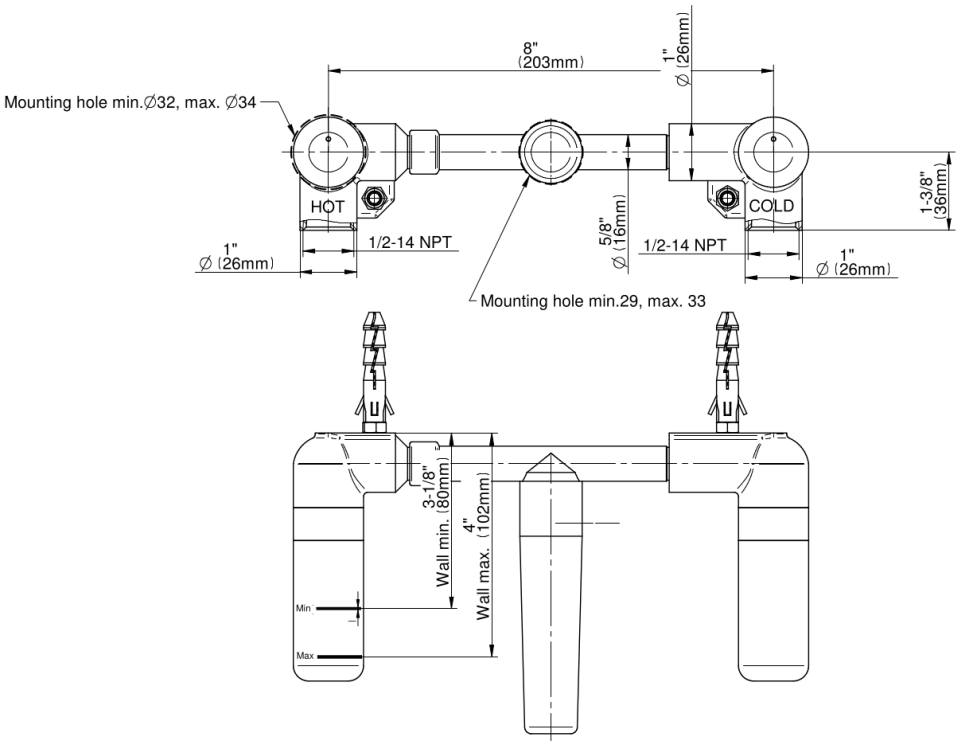MOD+
G-1012
Rough Valve