40200
Dressage Collection
Freestanding Bathtub in Wood and Sleek-Stone® Lite with integrated seat

Product Features

Available Finishes

- Canaletto Walnut
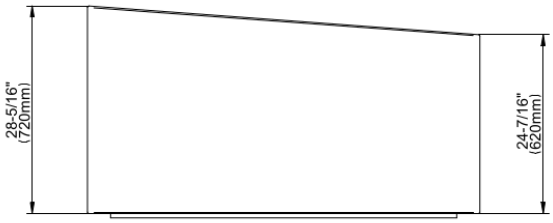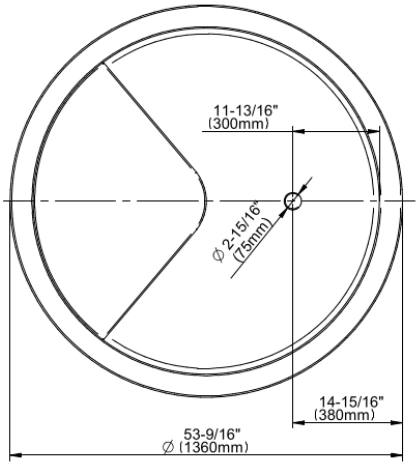
* Special order finish - call for availability