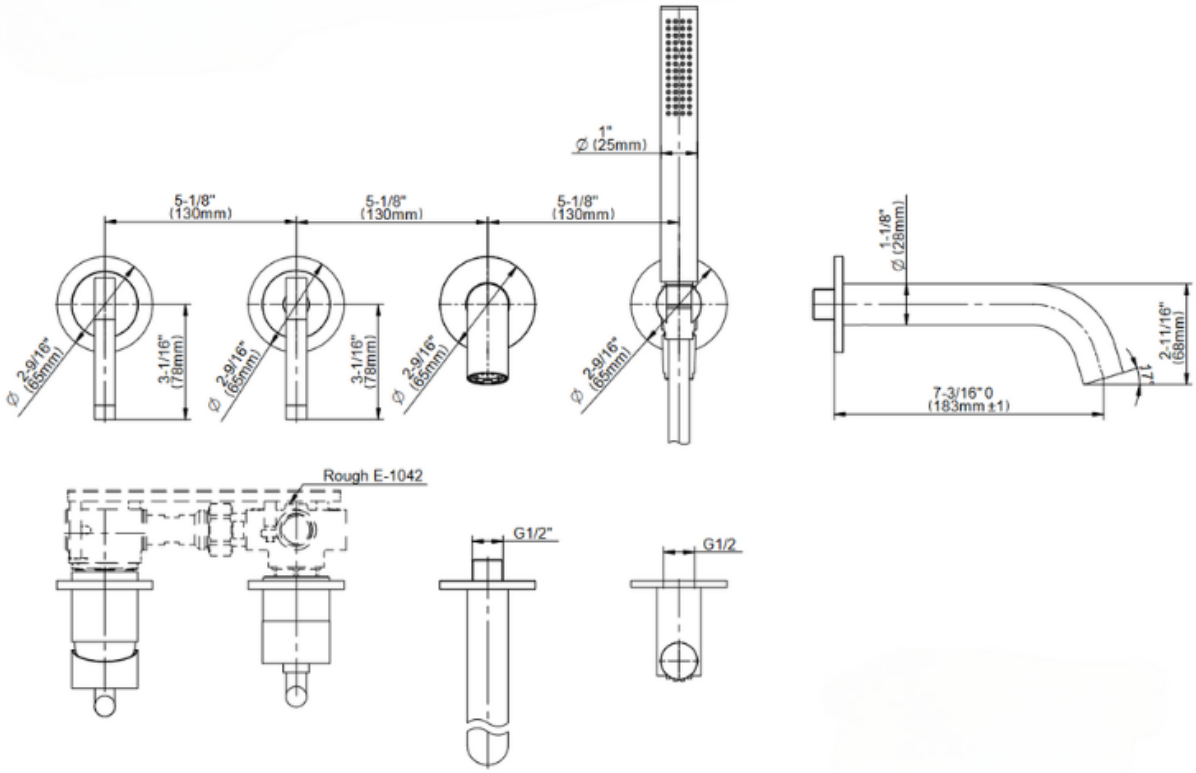
1"
Ø (25mm)
5-1/8"
(130mm)
5-1/8"
(130mm)
5-1/8"
(130mm)
Ø 2-9/16"
(65mm)
3-1/16"
(78mm)
Ø 2-9/16"
(65mm)
3-1/16"
(78mm)
Ø 2-9/16"
(65mm)
Ø 2-9/16"
(65mm)
1-1/8"
Ø (28mm)
2-11/16"
(68mm)
11°
7-3/16"0
(183mm ±1)
Rough E-1042
G1/2"
G1/2