Available Finishes

- Un?nished Brass
- Unfinished Brushed Brass
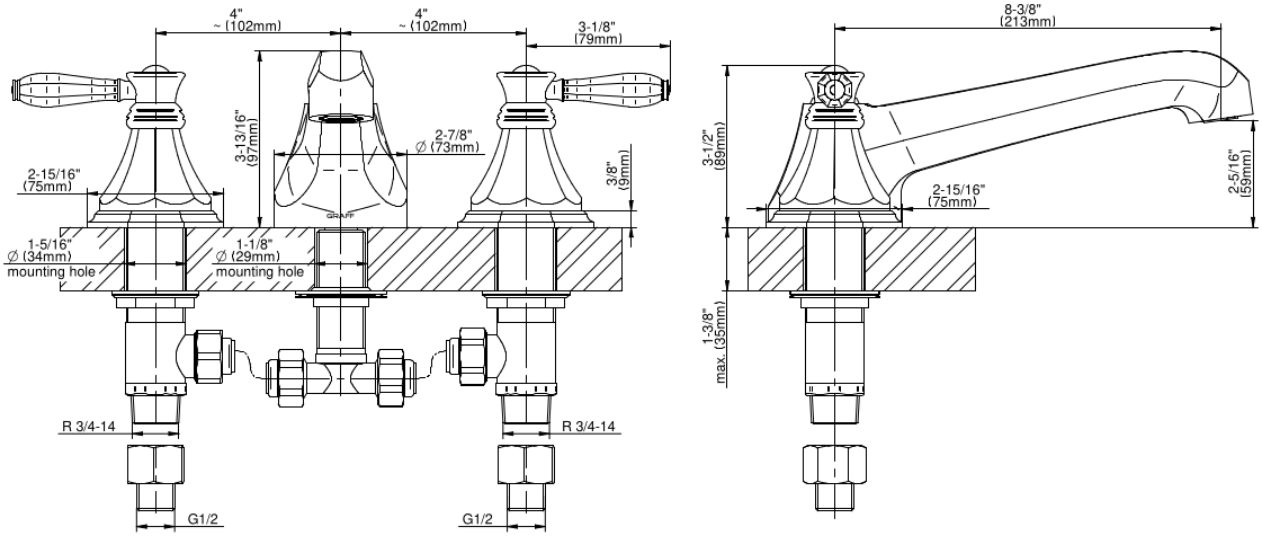
* Special order finish - call for availability