G-6751-LM46B
Terra Collection
Terra Roman Tub Set w/ Handshower - Rough and Trim

Product Features

- Aerated Flow Rate ~7 gpm @45 psi
- Deck-mounted handshower and diverter set included
- Optional in-line pressure balancing valve

Code compliance

- ADA

Available Finishes

- 24K Polished Gold
- 24K Brushed Gold
- Brushed Brass PVD®
- Architectural Black™
- Brushed Nickel
- Brushed Onyx PVD®
- Gunmetal PVD®
- Matte Black
- Olive Bronze
- Onyx PVD®
- Polished Brass PVD®
- Polished Chrome
- Polished Nickel
- Architectural White
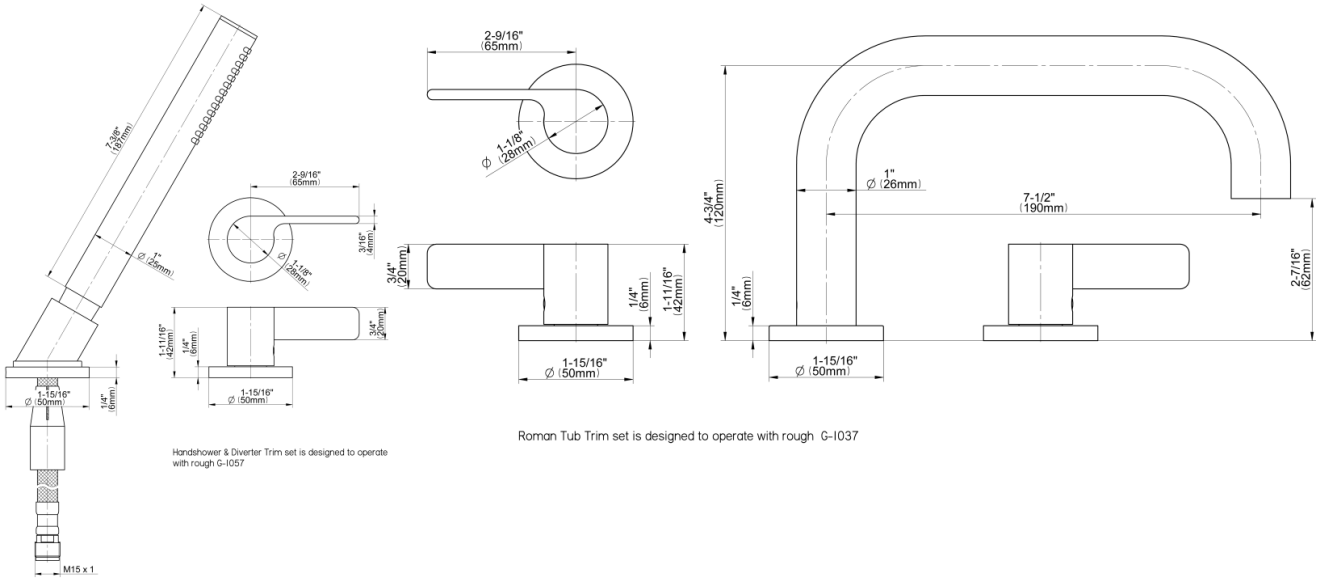
* Special order finish - call for availability