G-19108
Vintage Collection
24" Towel Bar

Product Features

Available Finishes

- 24K Polished Gold
- 24K Brushed Gold
- Architectural Black™
- Brushed Nickel
- Gunmetal PVD®
- Matte Black
- Olive Bronze
- Polished Chrome
- Polished Nickel
- Unfinished Brass
- Unfinished Brushed Brass
- Vintage Brushed Brass
- Architectural White
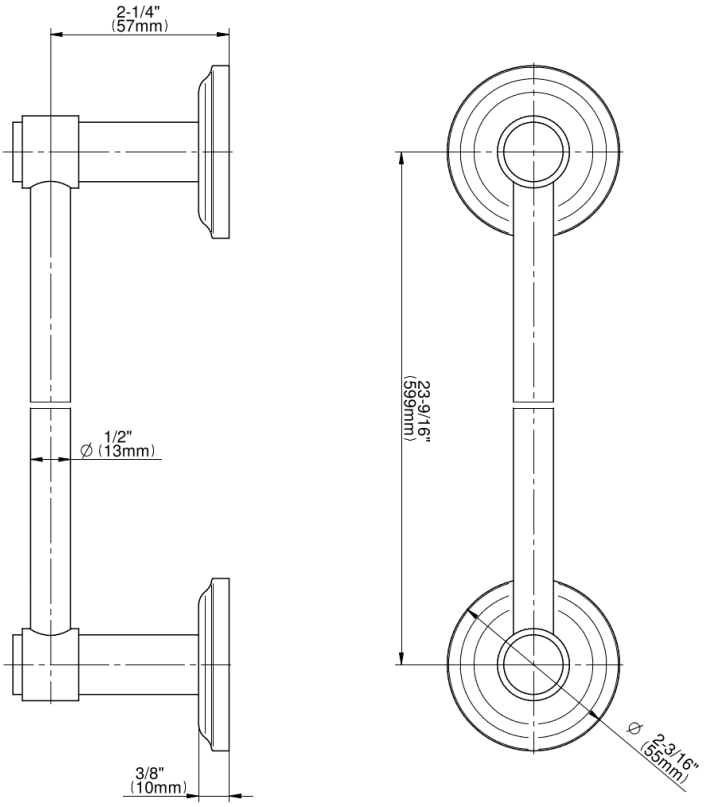
* Special order finish - call for availability