BATHROOM

Pressure Balancing Shower System - Tub and Shower

G-7290-LM40S

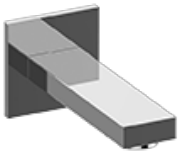

Information

- 1/2” pressure balance valve with diverter and trim
- 8” showerhead with 12” wall-mounted shower arm
- Showerhead features no-clog, easy-clean spray nozzles
- 8” contemporary tub spout
- Optional extension kit
- Showerhead flow rate ≤ 1.8 max gpm
- ADA
- CALGreen

Finishes

24K Polished Gold

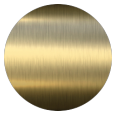

24K Brushed Gold

Architectural Black™

Matte Black

Polished Chrome

Polished Nickel

Steelnox® (Satin Nickel)

Architectural White

G-7290-LM40S

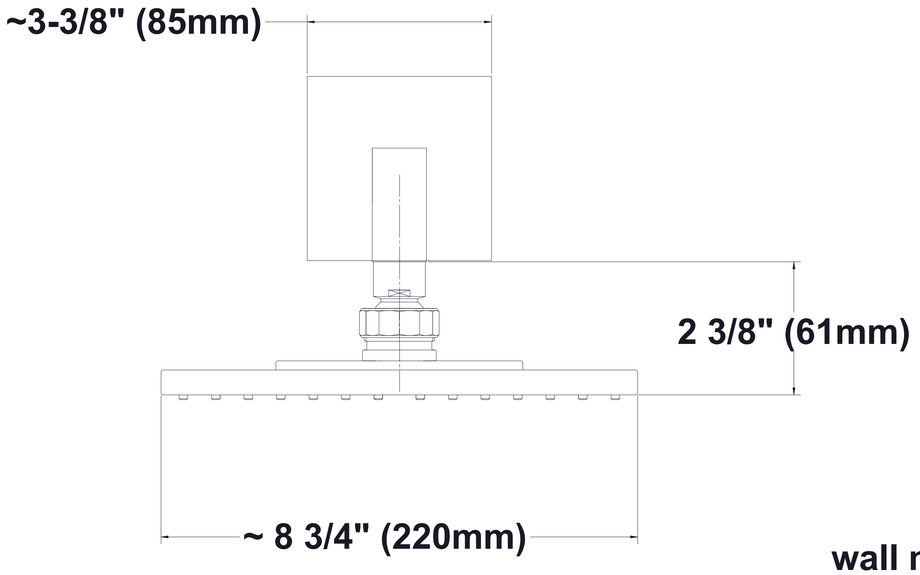
~3-3/8" (85mm)
2 3/8" (61mm)
~ 8 3/4" (220mm)

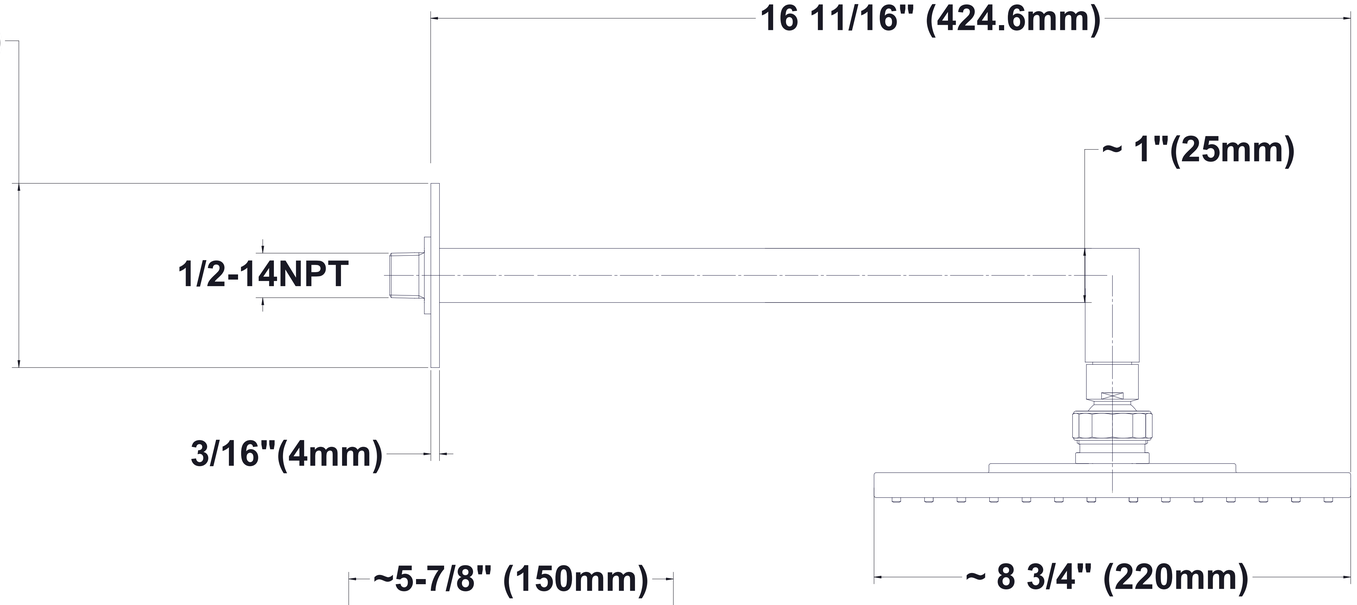
~ 3-3/8"(85mm)
16 11/16" (424.6mm)
~ 1"(25mm)
1/2-14NPT
3/16"(4mm)
~ 8 3/4" (220mm)

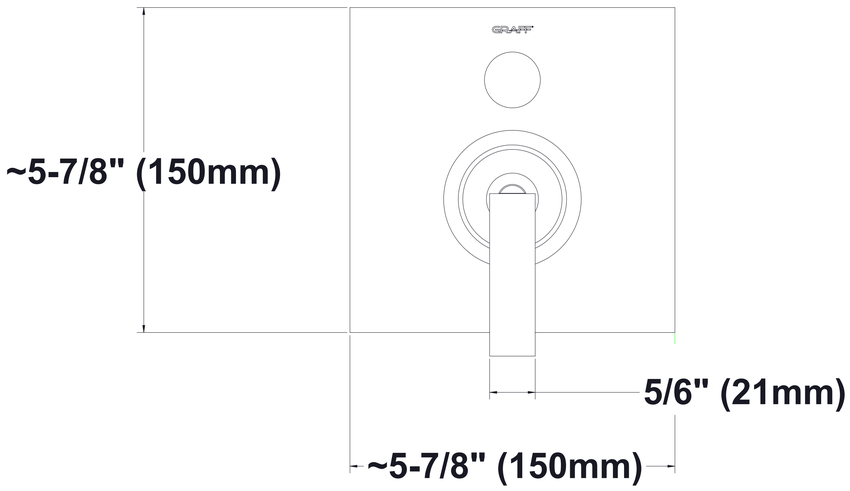
~5-7/8" (150mm)
5/6" (21mm)
~5-7/8" (150mm)

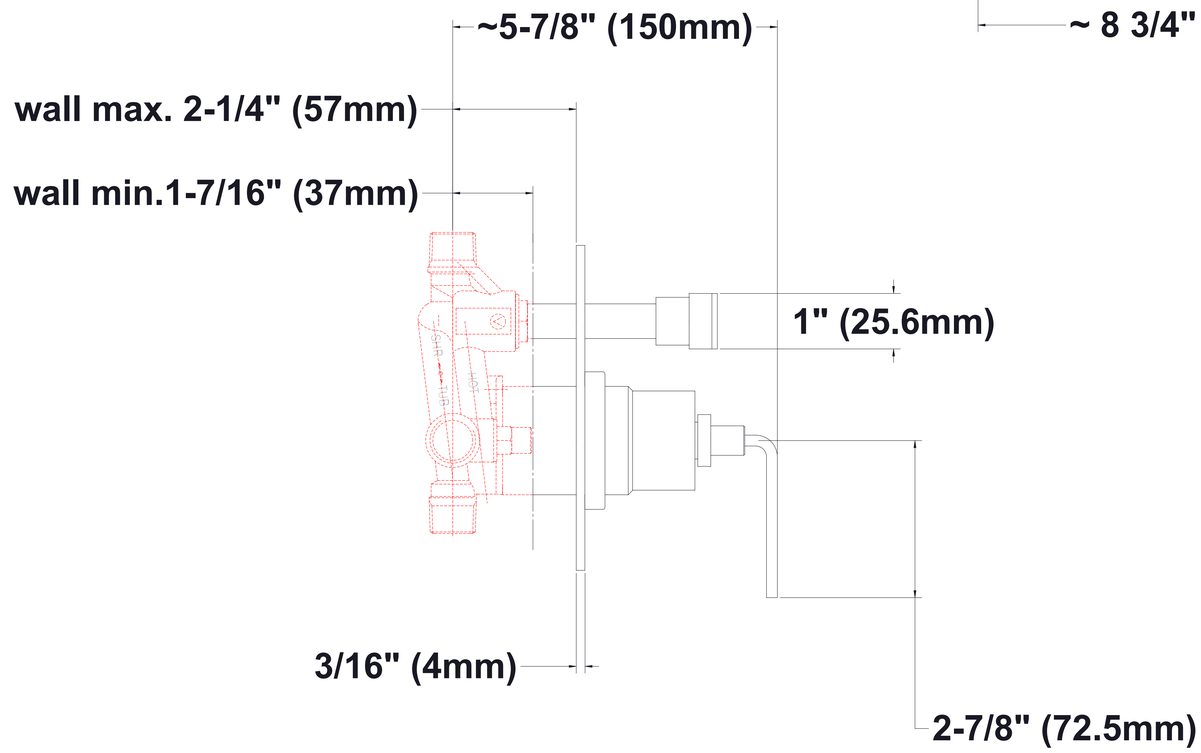
~5-7/8" (150mm)
wall max. 2-1/4" (57mm)
wall min.1-7/16" (37mm)
1" (25.6mm)
3/16" (4mm)
2-7/8" (72.5mm)

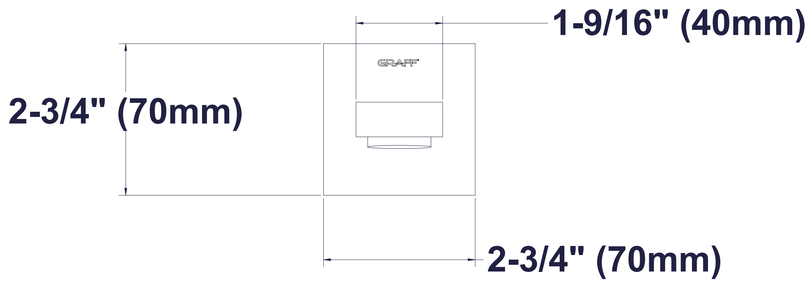
1-9/16" (40mm)
2-3/4" (70mm)
2-3/4" (70mm)

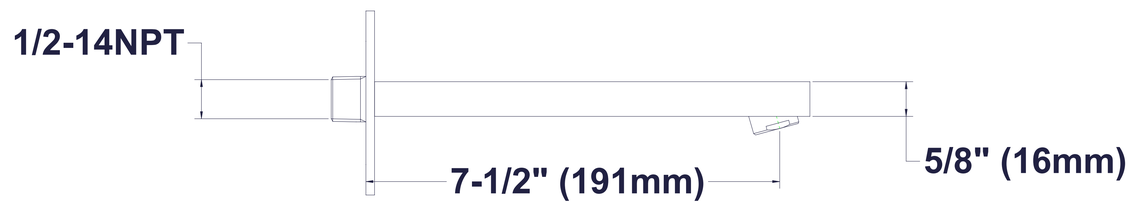
1/2-14NPT
7-1/2" (191mm)
5/8" (16mm)

BATHROOM

Concealed Pressure Balancing Valve Rough w/Diverter

G-7055

Information

- Anti-scald protection
- 1/2" universal inlets/outlets with male threads
- Built-in service stops
- Push-button diverter
- For use with tub & shower configuration
- Supplied with protective plastic guard

Finishes

24K Polished Gold

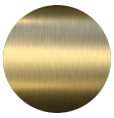
24K Brushed Gold

Architectural Black™

Matte Black

Polished Chrome

Polished Nickel

Steelnox® (Satin Nickel)

Architectural White

G-7055

1/2" Rough Valve w/Diverter

Product Features

- Anti-scald protection
- 1/2" universal inlets/outlets with male threads
- Built-in service stops
- Push-button diverter
- For use with tub & shower configuration
- Supplied with protective plastic guard

Warranty

- Limited lifetime warranty

For complete warranty information go to www.graff-faucets.com/en-nam/warranty

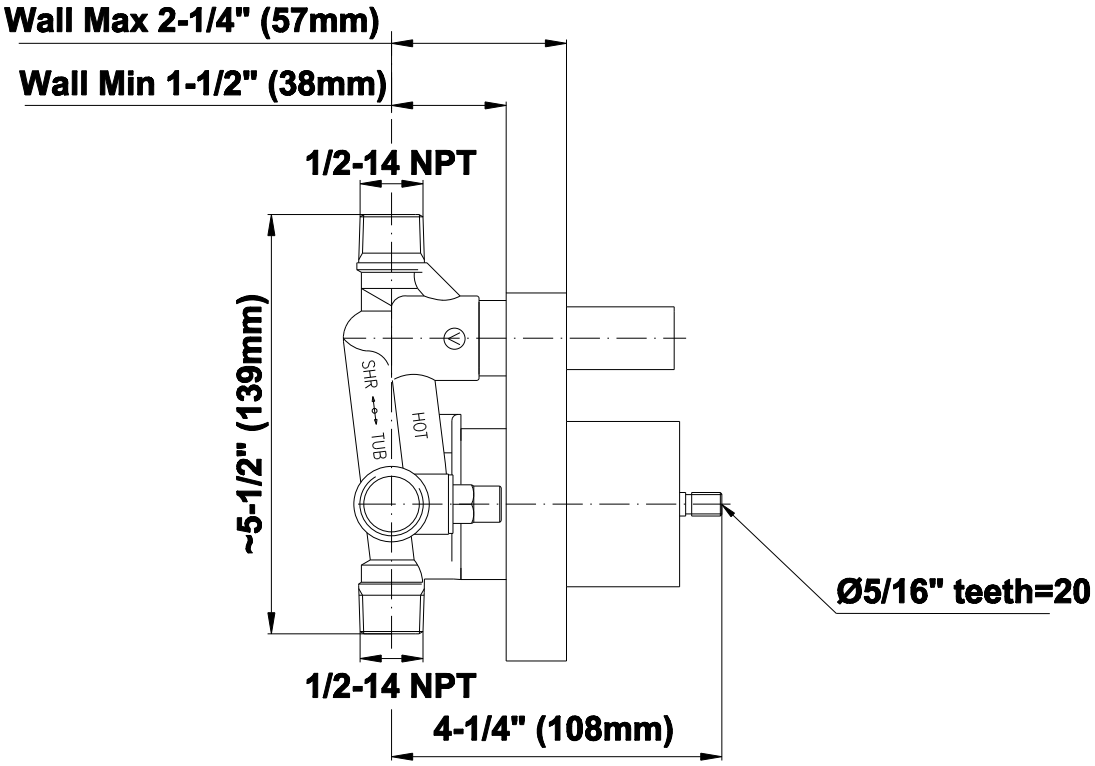

The measurements shown are for reference only. Products and specifications shown are subject to change without notice. Revised 06/2014.

www.graff-faucets.com | phone: 800-954-4723

BATHROOM

Immersion SOLID Trim Plate w/Handle

G-7090-LM40S-T

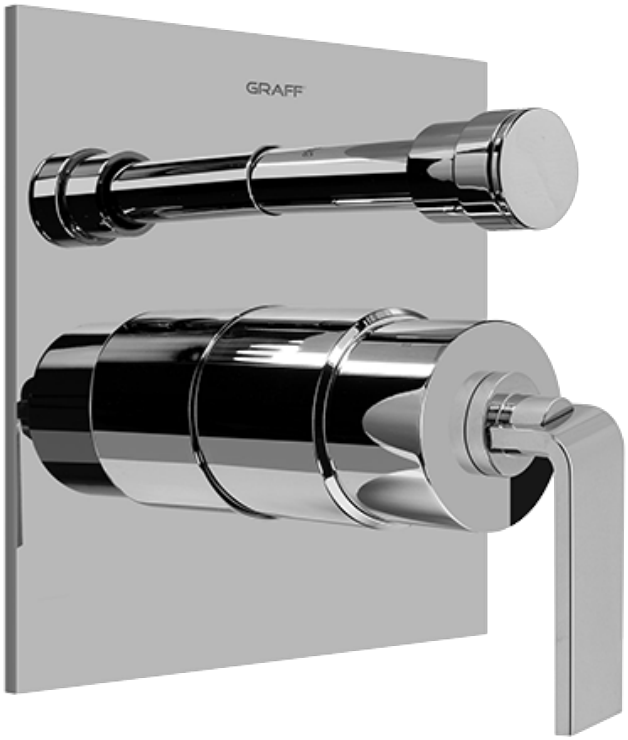

Information

- Single metal lever handle
- Decorative trim plate
- Includes push-button diverter
- Use with G-7055 pressure balancing rough valve for shower and tub configurations
- To complete package, you must order rough valve
- ADA

Finishes

24K Polished Gold

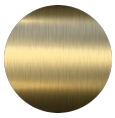
24K Brushed Gold

Architectural Black™

Matte Black

Polished Chrome

Polished Nickel

Steelnox® (Satin Nickel)

Architectural White

G-7090

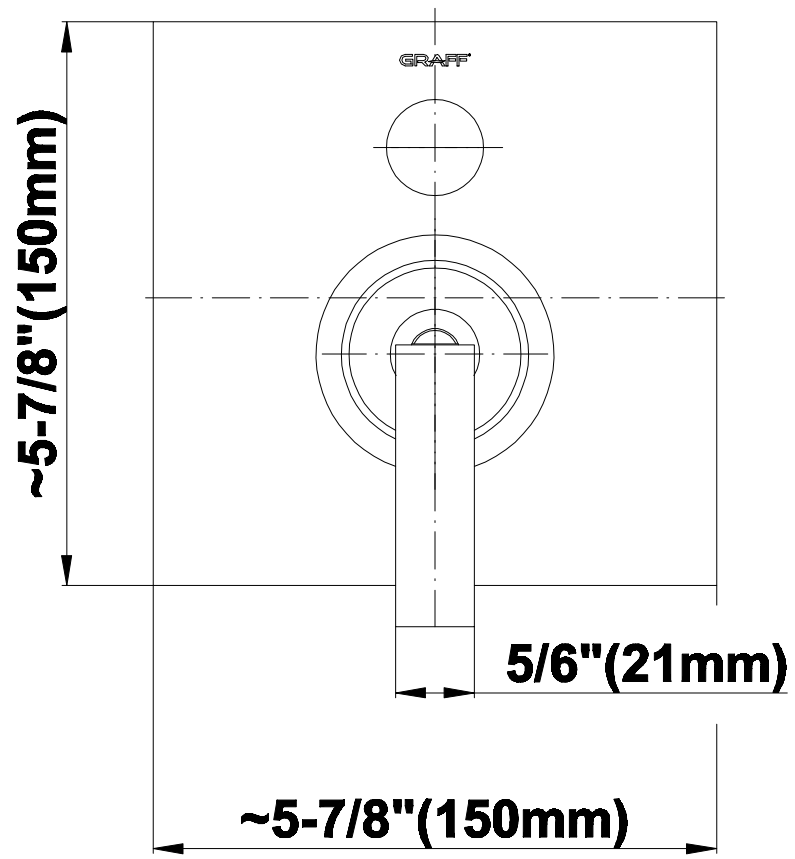

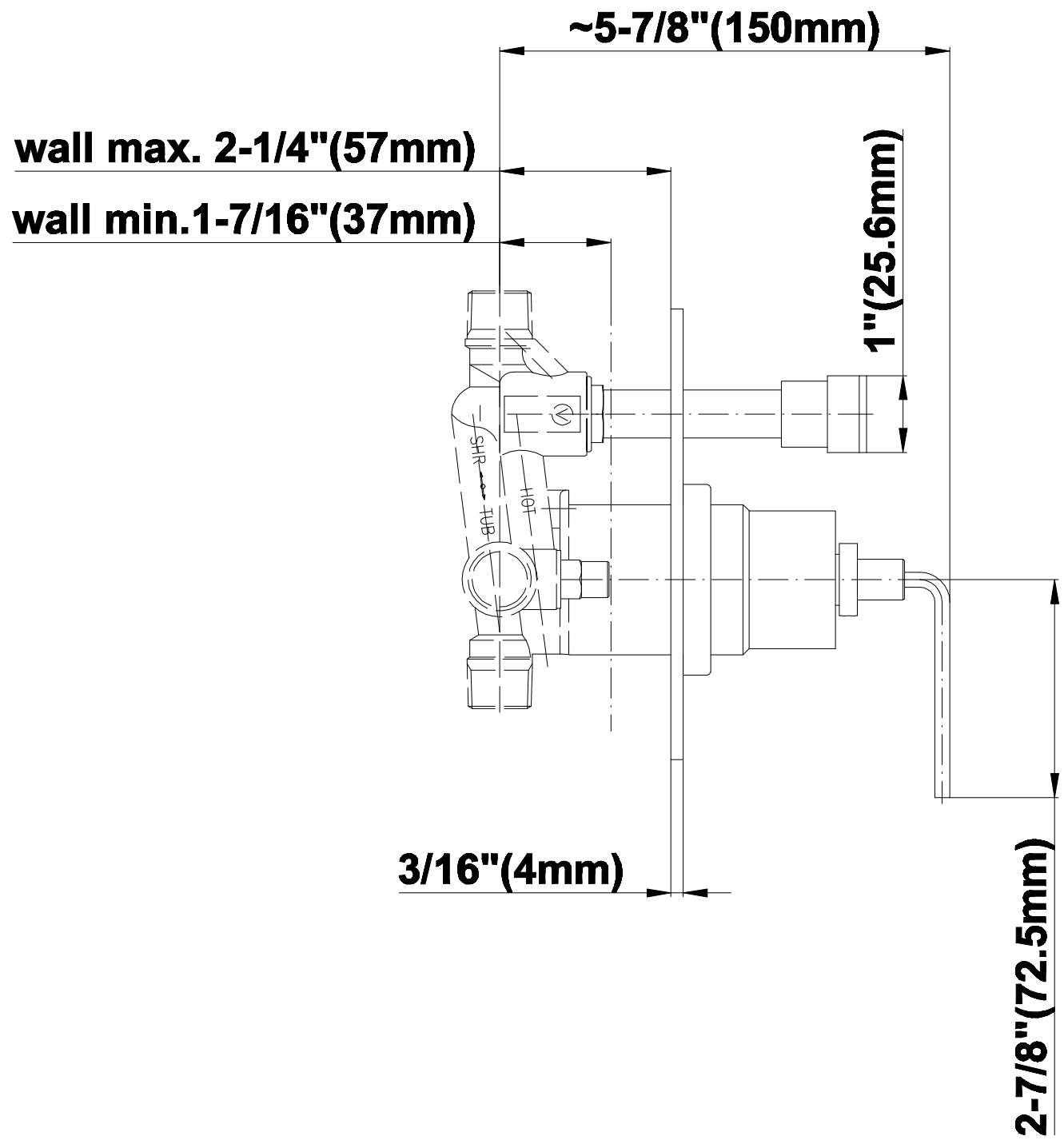

GRAFF®

CUTTING EDGE DESIGN

BATHROOM

8" Square Brass Showerhead

G-8438

Information

- 1/4” thick
- 144 no-clog, easy-clean rubber spray nozzles
- Recommended use with ceiling shower arm
- Recommended for use at no more than 10 degrees tilt
- Showerhead flow rate ≤ 1.8 max gpm
- CALGreen

Finishes

24K Polished Gold

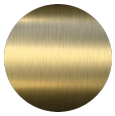
24K Brushed Gold

Architectural Black™

Matte Black

Polished Chrome

Polished Nickel

Steelnox® (Satin Nickel)

Architectural White

G-8438

Aqua-Sense Collection

Contemporary 8" Square Showerhead

Product Features

- 1/4" thick
- 144 no-clog, easy-clean rubber spray nozzles
- Showerhead flow rate ≤ 1.8 max gpm

Available Finishes

- Polished Chrome
  G-8438-PC
- Brushed Nickel
  G-8438-PN
- Polished Nickel
  G-8438-BNi
- Unfinished Brass*
  G-8438-UB*
- Steelnox
  G-8438-SN
- Olive Brass*
  G-8438-OB*
- Architectual Black with Chrome Accents*
  G-8438-PC/BK*
- Gold*
  G-8438-AU*
- Brushed Gold*
  G-8438-BAU

* Special order finish- call for availability

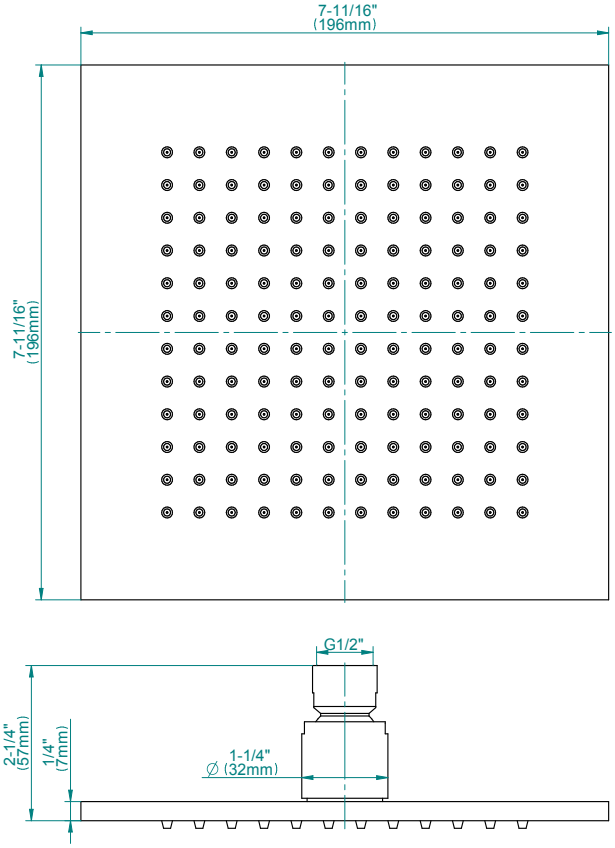

Code Compliance

- *CALGreen*

Warranty

- Limited lifetime warranty

For complete warranty information go to www.graff-designs.com/en-nam/warranty

The measurements shown are for reference only. Products and specifications shown are subject to change without notice. Revised 12/2017

www.graff-designs.com | phone: 800-954-4723

BATHROOM

Contemporary 12" Shower Arm

G-8530

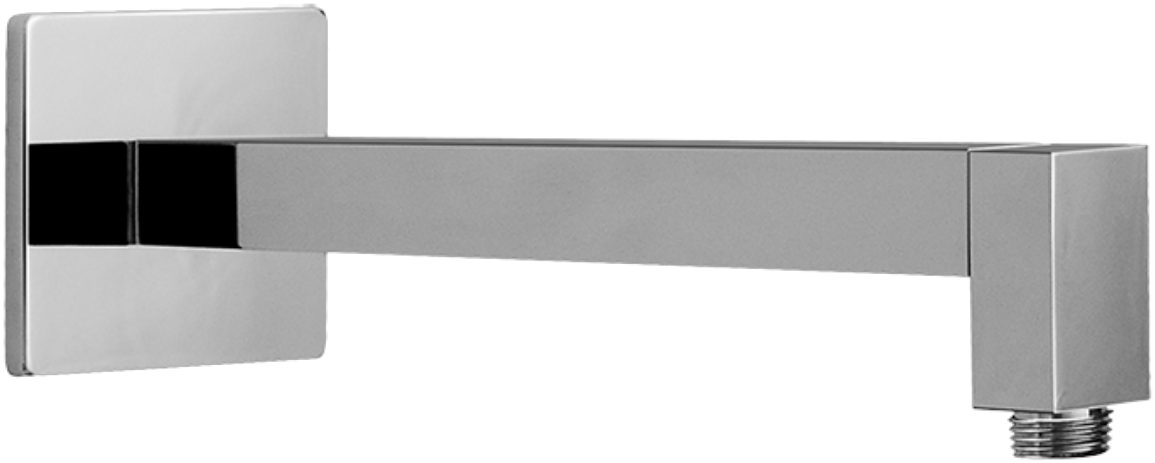

Information

- Includes arm and square flange
- 1/2" NPT male thread inlet
- For use with all showerheads (especially G-8438)

Finishes

24K Polished Gold

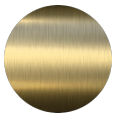
24K Brushed Gold

Architectural Black™

Matte Black

Polished Chrome

Polished Nickel

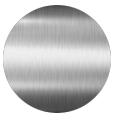
Steelnox® (Satin Nickel)

Architectural White

G-8530

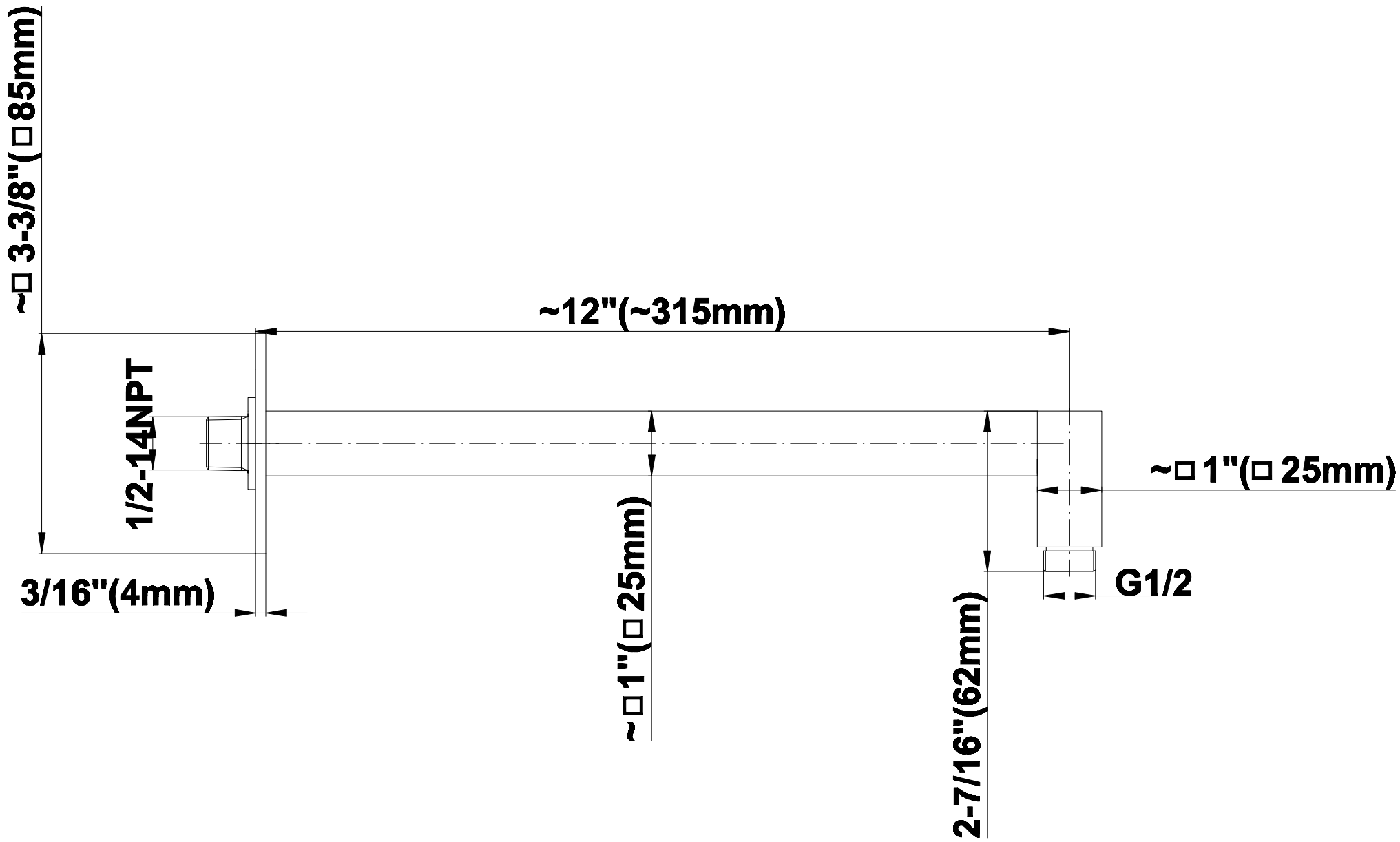

GRAFF®
CUTTING EDGE DESIGN

BATHROOM

8" Contemporary Tub Spout

G-8575

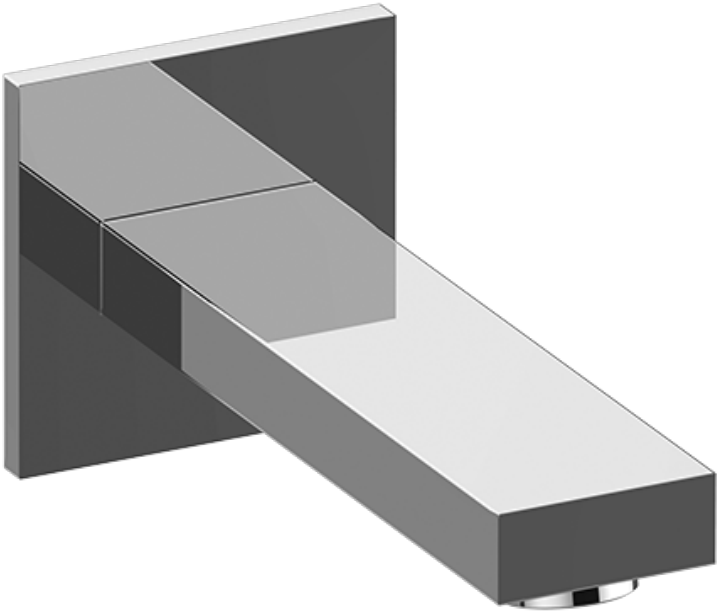

Information

- Includes spout ring
- 1/2" NPT male thread inlet
- Tub spout flow rate ~ 8.7 gpm @60 psi

Finishes

24K Polished Gold | 24K Brushed Gold | Architectural Black™ | Matte Black | Polished Chrome | Polished Nickel | Steelnox® (Satin Nickel) | Architectural White

G-8575
Sade Collection
8" Contemporary Tub Spout

GRAFF®
Art of Bath

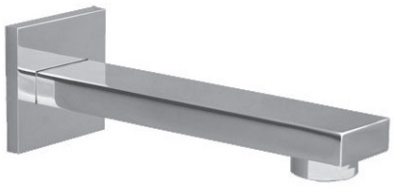

Product Features

- Includes spout ring
- 1/2" NPT male thread inlet

Tub Spout Flow Rate (gal/min)				
Model	Pressure (psi)			
	20 psi	40 psi	60 psi	80 psi
G-8575	4.62	6.37	7.79	9.01

Warranty

- Limited lifetime warranty

For complete warranty information go to
www.graff-designs.com/en-nam/warranty

Available Finishes

- Polished Chrome
  G-8575-PC
- Polished Nickel*
  G-8575-PN
- Matte Black*
  G-8575-MBK
- Architectural Black*
  G-8575-BK
- Architectural White*
  G-8575-WT
- Steelnox® (Satin Nickel)
  G-8575-SN
- 24K Gold*
  G-8575-AU
- Brushed 24K Gold*
  G-8575-BAU

*Special order finish - call for availability

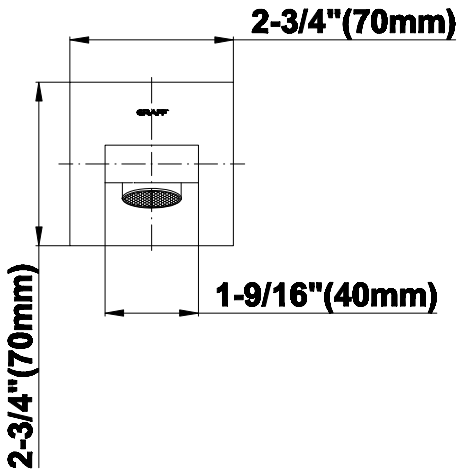

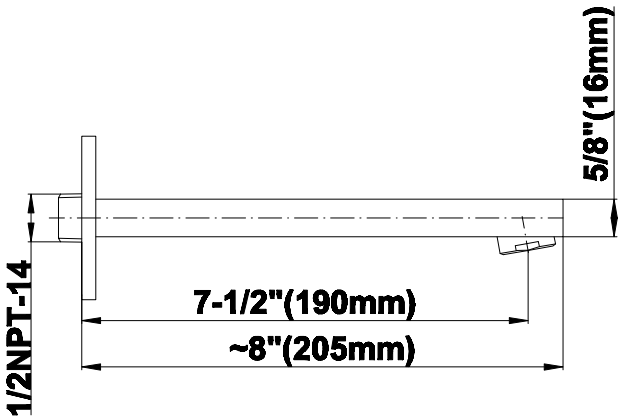

The measurements shown are for reference only. Products and specifications shown are subject to change without notice. Revised 07/2021.
www.graff-designs.com | phone: 800-954-4723