G-8077
Stop/Volume Control Rough Valve

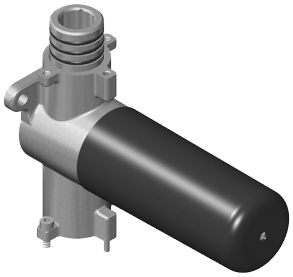

Produktmerkmale
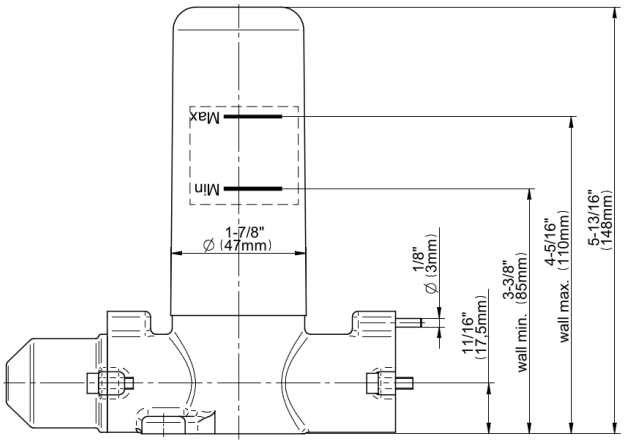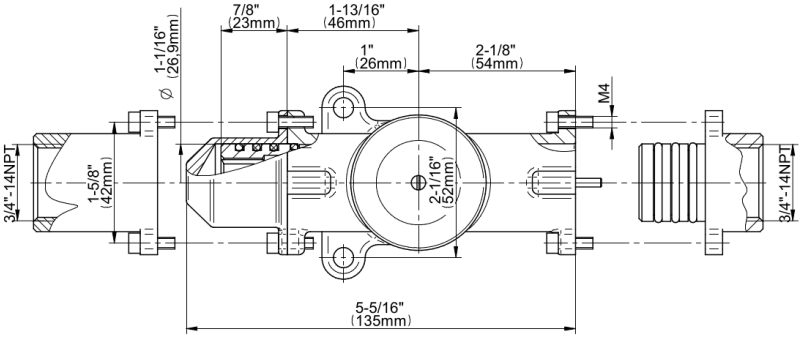
- 18.1 gpm @ 60 psi
- 3/4" universal inlets/outlets with female threads
- Stacking inlet and outlet feature
- Supplied with protective plastic cover
- CalGreen compliant dependent on functions