BADEZIMMER

Camden Roman Tub

G-6950-LM48B

Information

- Matching deck-mounted handshower & diverter set available
- ADA
- CALGreen

Oberflächen

Gold 24K

Geburstetes Gold 24K

Gebürstetes Messing PVD®

Schwarz_Architectural Black™

Gebürstetes Nickel

Gebürstetes Onyx PVD®

Rosé-Gold / Gebürstetes Kupfer PVD®

Gunmetal PVD®

Matt schwarz

Olivebraun

Onyx PVD®

Poliertes Messing PVD®

Poliertes Chrom

Poliertes Nickel

Rosé-Gold / Poliertes Kupfer PVD®

Rohmessing

Unbehandeltes gebürstetes Messing

Messing gebürstet Vintage

Weiss

G-6950-LM48B
Camden Collection
Roman Tub

Product Features

- Matching deck-mounted hand-shower & diverter set available

Available Finishes

- Polished Chrome
  G-6950-LM48B-PC
- Brushed Nickel
  G-6950-LM48B-BNi
- Polished Nickel
  G-6950-LM48B-PN
- Olive Bronze
  G-6950-LM48B-OB
- Unfinished Brass*
  G-6950-LM48B-UB*
- Gold*
  G-6950-LM48B-AU*
- Brushed Gold*
  G-6950-LM48B-BAU*

Warranty

- Limited lifetime warranty

For complete warranty information go to https://www.graff-faucets.com/en/info/faqs

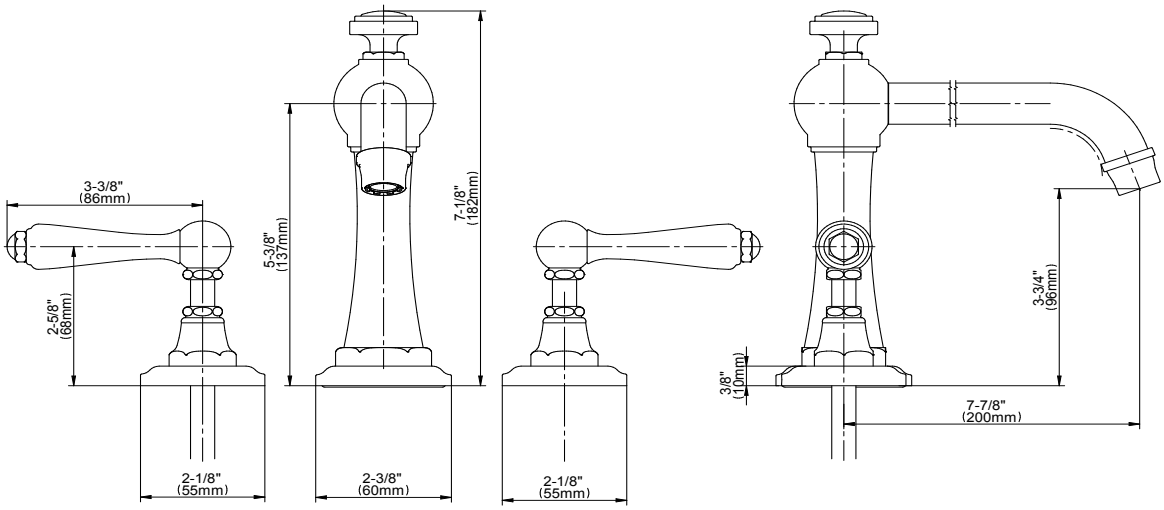

The measurements shown are for reference only. Products and specifications shown are subject to change without notice. Revised 3/2018.

www.graff-designs.com | phone: 800-954-4723

BADEZIMMER

Rough Valve
G-1037

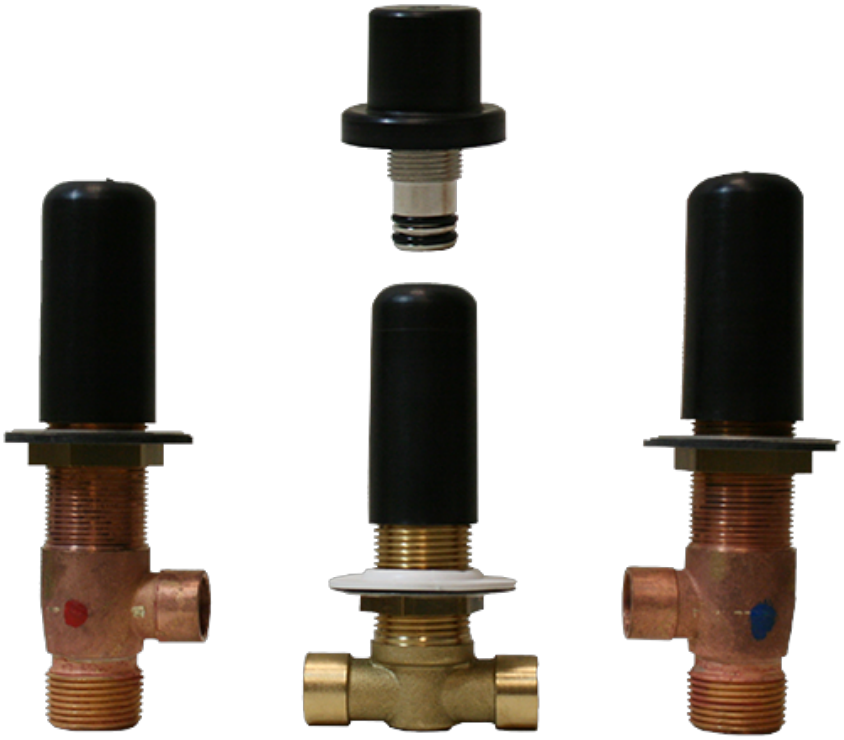

Information

- 3/4" male NPT inlets
- Quick connect tub spout

Oberflächen

Gold 24K

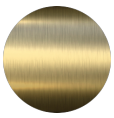
Geburstetes Gold 24K

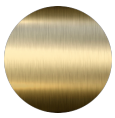
Gebürstetes Messing PVD®

Schwarz_Architectural Black™

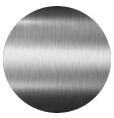
Gebürstetes Nickel

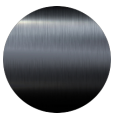
Gebürstetes Onyx PVD®

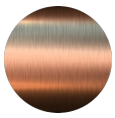
Rosé-Gold / Gebürstetes Kupfer PVD®

Gunmetal PVD®

Matt schwarz

Olivebraun

Onyx PVD®

Poliertes Messing PVD®

Poliertes Chrom

Poliertes Nickel

Rosé-Gold / Poliertes Kupfer PVD®

Rohmessing

Unbehandeltes gebürstetes Messing

Messing gebürstet Vintage

Weiss

G-1037

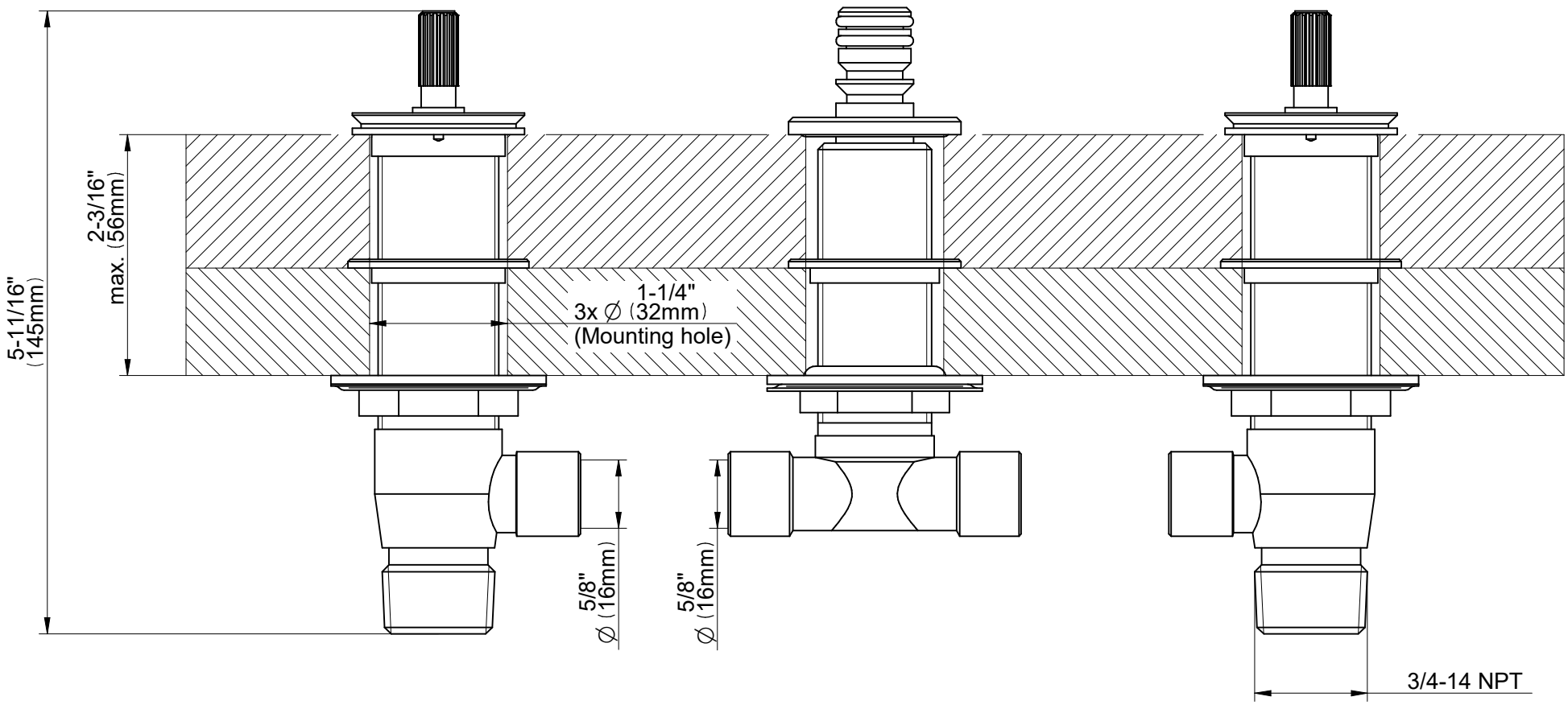

GRAFF®
Art of Bath

BADEZIMMER

Camden Roman Tub

G-6950-LM48B

Information

- Matching deck-mounted handshower & diverter set available
- ADA
- CALGreen

Oberflächen

Gold 24K

Geburstetes Gold 24K

Gebürstetes Messing PVD®

Schwarz_Architectural Black™

Gebürstetes Nickel

Gebürstetes Onyx PVD®

Rosé-Gold / Gebürstetes Kupfer PVD®

Gunmetal PVD®

Matt schwarz

Olivebraun

Onyx PVD®

Poliertes Messing PVD®

Poliertes Chrom

Poliertes Nickel

Rosé-Gold / Poliertes Kupfer PVD®

Rohmessing

Unbehandeltes gebürstetes Messing

Messing gebürstet Vintage

Weiss

G-6950-LM48B

Camden Collection
Roman Tub

Product Features

- Matching deck-mounted hand-shower & diverter set available

Available Finishes

- Polished Chrome
  G-6950-LM48B-PC
- Brushed Nickel
  G-6950-LM48B-BNi
- Polished Nickel
  G-6950-LM48B-PN
- Olive Bronze
  G-6950-LM48B-OB
- Unfinished Brass*
  G-6950-LM48B-UB*
- Gold*
  G-6950-LM48B-AU*
- Brushed Gold*
  G-6950-LM48B-BAU*

Warranty

- Limited lifetime warranty

For complete warranty information go to https://www.graff-faucets.com/en/info/faqs

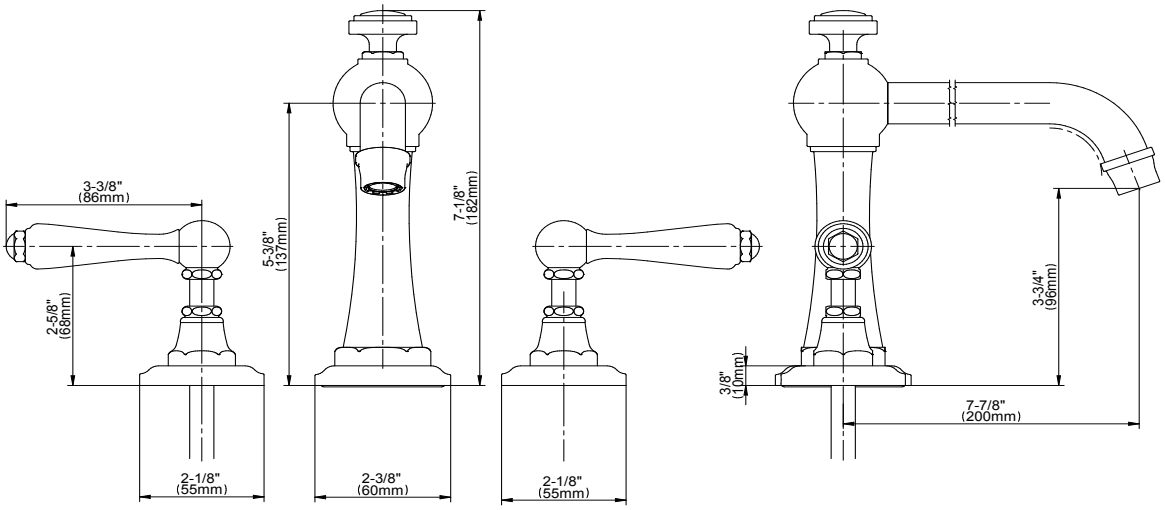

The measurements shown are for reference only. Products and specifications shown are subject to change without notice. Revised 3/2018.

www.graff-designs.com | phone: 800-954-4723