M-Series
G-81-76
Thermostatic Unit, Cut-off Valve

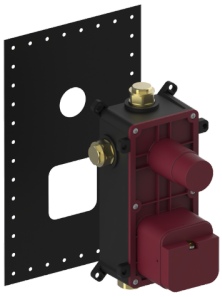

产品特点
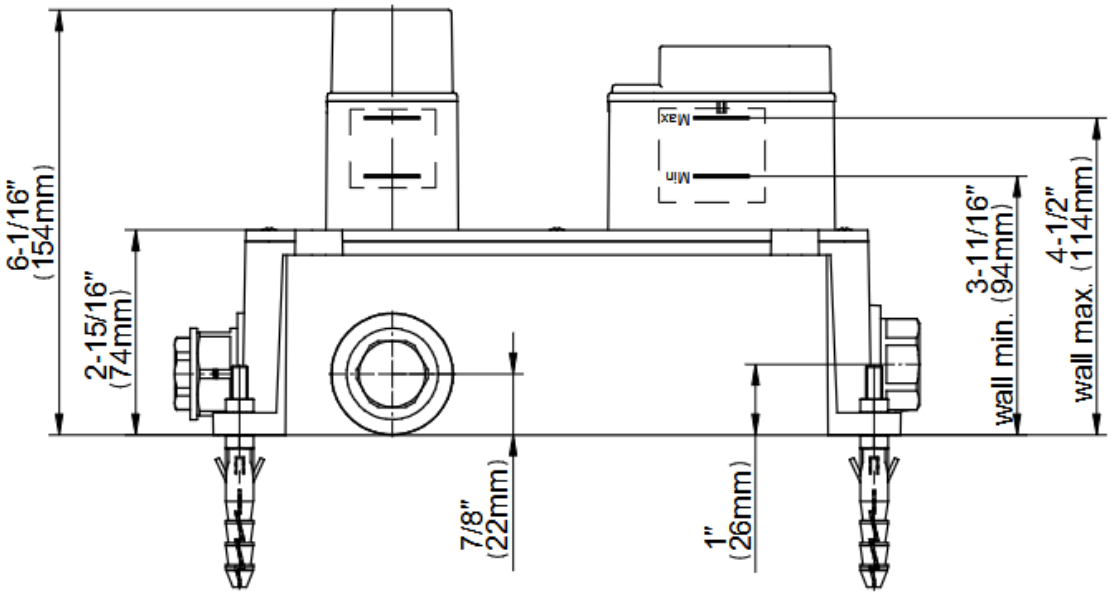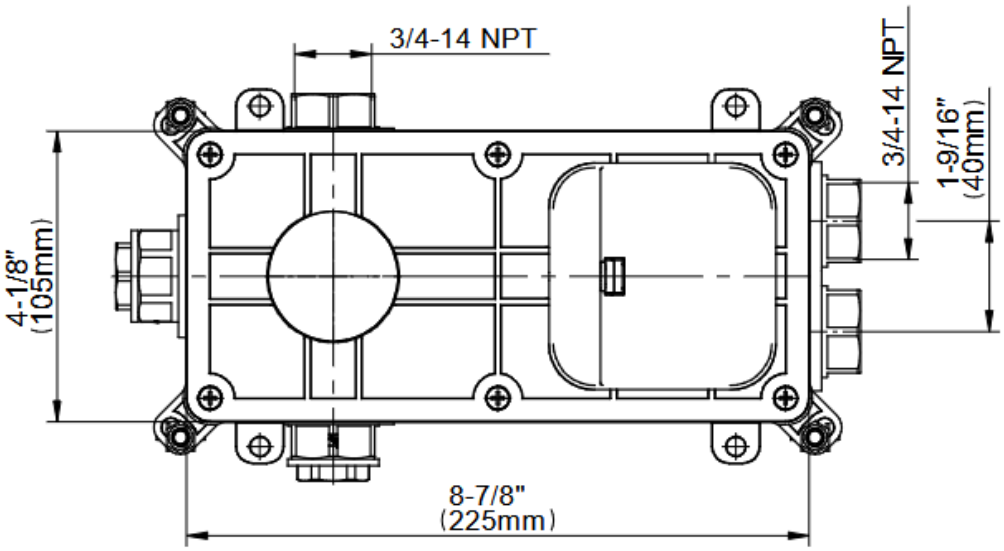
- Uses G-8006 and G-8076 rough valves
- Sealed housing for easy installation