G-1952-LM63L-T
Topaz Collection
Topaz Roman Tub

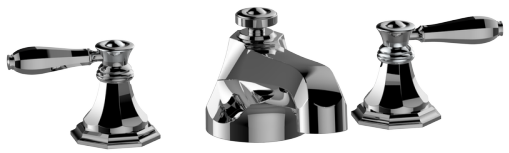

产品特点

- Aerated flow rate 8 gpm @60 psi
- Matching deck-mounted handshower and diverter set available
- To complete package, you must order rough valve

规范合规性

- ADA

可用饰面

- 金色
- 拉丝金
- PVD拉丝黄铜
- Brushed Gold PVD®
- 黑色_ Architectural Black™
- 拉丝镍
- Brushed Nickel PVD®
- Brushed Onyx PVD®
- Brushed Tuscan Bronze PVD®
- Rose Gold / Brushed Copper PVD®
- Gunmetal PVD®
- 哑光黑
- 古铜
- Onyx PVD®
- PVD抛光黄铜
- 镀铬
- Polished Gold PVD®
- 镀镍
- Polished Nickel PVD®
- Polished Tuscan Bronze PVD®
- Rose Gold / Polished Copper PVD®
- Satin Gold PVD®
- Steelnox®缎镍
- 未抛光黄铜
- 未抛光拉丝黄铜
- 复古拉丝黄铜
- Warm Bronze PVD®
- 白色
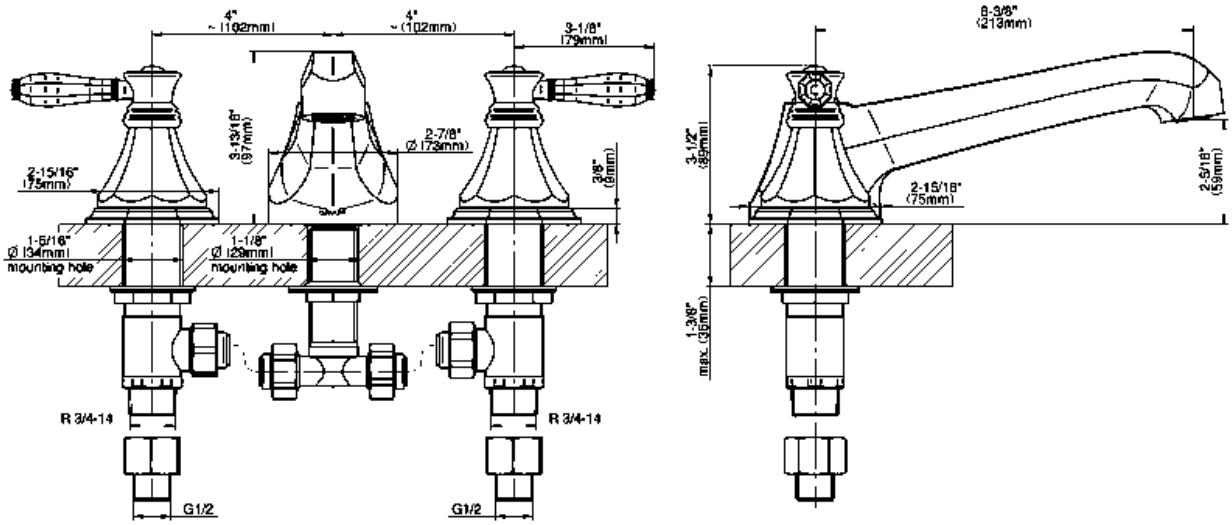
* 特殊订单完成 - 请致电询问库存情况